STANDARD PLANS
FOR
HIGH SECURITY HASPS
AND
PHYSICAL SECURITY EQUIPMENT ASHORE

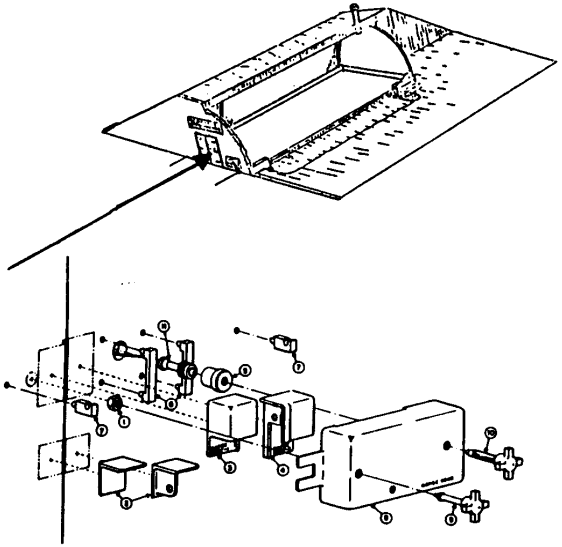

by

Naval Weapons Support Center
(NAVWPNSUPPCEN)
Crane, Indiana 47522

ACTIVITY REQUESTS FOR HIGH SECURITY HASPS, LOCKS, SAFES, ETC

Backround: NAVWPNSUPPCEN Crane (Code-208) is in the business of furnishing physical security hardware to activities and ships for the Arms, Ammunition and Explosives (AA&E) and Nuclear Weapons Security Programs. However, recent requests from the above type units for this hardware and the fact that over 50 percent of the ammunition and weapons in storage do not qualify for the level of protection we can provide, make it necessary that a policy be established regarding validation of requests.

Policy: Henceforth, an activity wishing hardware should forward a message or leter to NAVWPNSUPPCEN Crane (Code 208) stating the following:

a. Requesting Activity

b. Building Number or Magazine Number (where hasps is to be installed)

c. Risk Category being stored

d. Style* of Hasp or type of Door (correlate to building number)

e. Complete Shipping Address (include ATTN: name and code)

f. Desired Delivery Date (normal shipping time: 2-3 weeks)

g. A Point of Contact, with phone number

Discussion: the above information will allow us to validate a request, prioritize its filling, and initiate shipment as quickly as possible to meet security requirements.

Forward Requests to:

Commander
Code 3046
NAVSURFWARCENDIV
300 Highway 361
Crane, IN 47522-5001

For Additional Assistance, Contact Code 208 Representative:

Mr. Bob Price
Mr. Jeff Solliday

Telephone: Commercial (812) 854-8560/5840
DSN 482-5860/5840

*There are two styles of Landbase hasps. See Hasp Style Determination for correlation of style to door type.

HASP STYLE DETERMINATION

HIGH SECURITY HASP
STYLE 0957

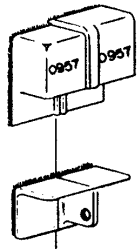

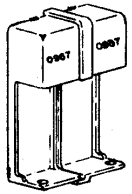

STYLE 0957
MK-2 MOD-9

TYPE I WITHOUT ASTRAGAL

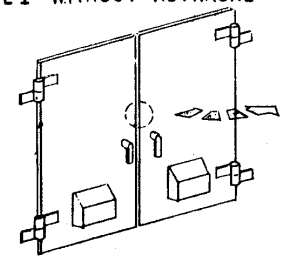

WITH ASTRAGAL

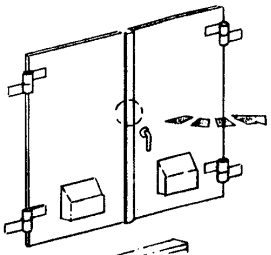

TYPE III SINGLE DOOR HINGED RIGHT

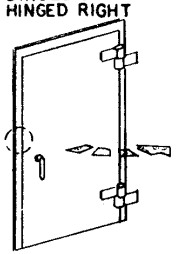

TYPE VI SLIDING DOOR MOVING RIGHT

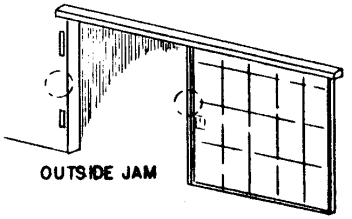

OUTSIDE JAM

TYPE IX DOUBLE SLIDING DOORS

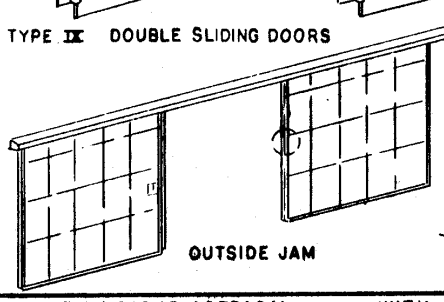

OUTSIDE JAM

INSIDE JAM

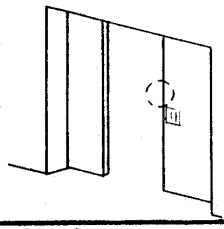

TYPE XI SINGLE DOOR HINGED LEFT

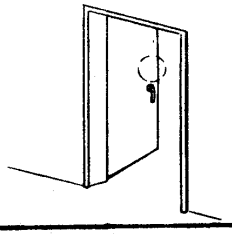

TYPE XIII SLIDING DOOR MOVING RIGHT

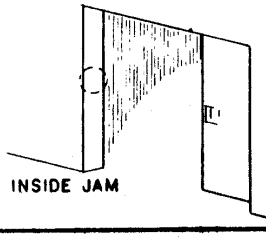

INSIDE JAM

HIGH SECURITY HASP
STYLE 0958

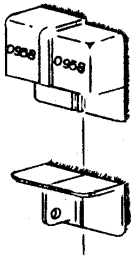

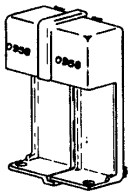

STYLE 0958
MK-2 MOD-9

TYPE II WITHOUT ASTRAGAL

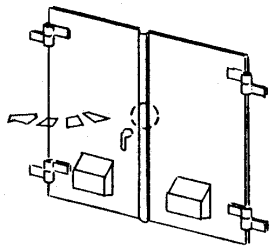

WITH ASTRAGAL

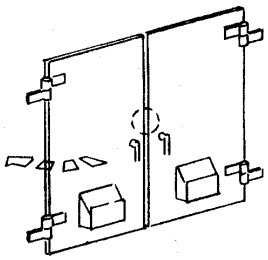

TYPE IV SINGLE DOOR HINGED LEFT

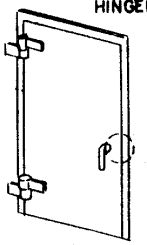

TYPE V SLIDING DOOR MOVING LEFT

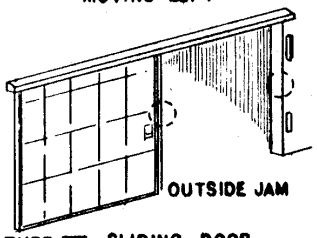

OUTSIDE JAM

TYPE IX DOUBLE SLIDING DOORS
(SEE ABOVE)

TYPE X SINGLE DOOR HINGED RIGHT

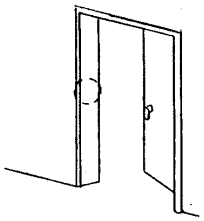

TYPE XII SLIDING DOOR MOVING LEFT

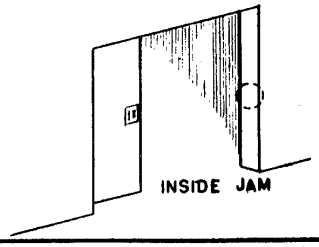

INSIDE JAM

NOTICE: THE CONTENTS AND DESIGN DETAIL OF THIS DRAWING WERE DEVELOPED BY THE NAVAL AMMUNITION PROGRAMS ENGINEERING CENTER AND SHOULD BE USED AS REFERENCE PROPERTY.

NAPEC DRAWING NO. 0957 SHEET 1 OF 3 A

NOTE:-
1. ITEM 3 TO BE FURNISHED BY CUSTOMER.

REVISIONS				
ZONE	LTR.	DESCRIPTION	DATE	APPROVAL
	A	ADDED 1/2 FILLERS TO #1 & #2 TITLE REVISED	5-78	

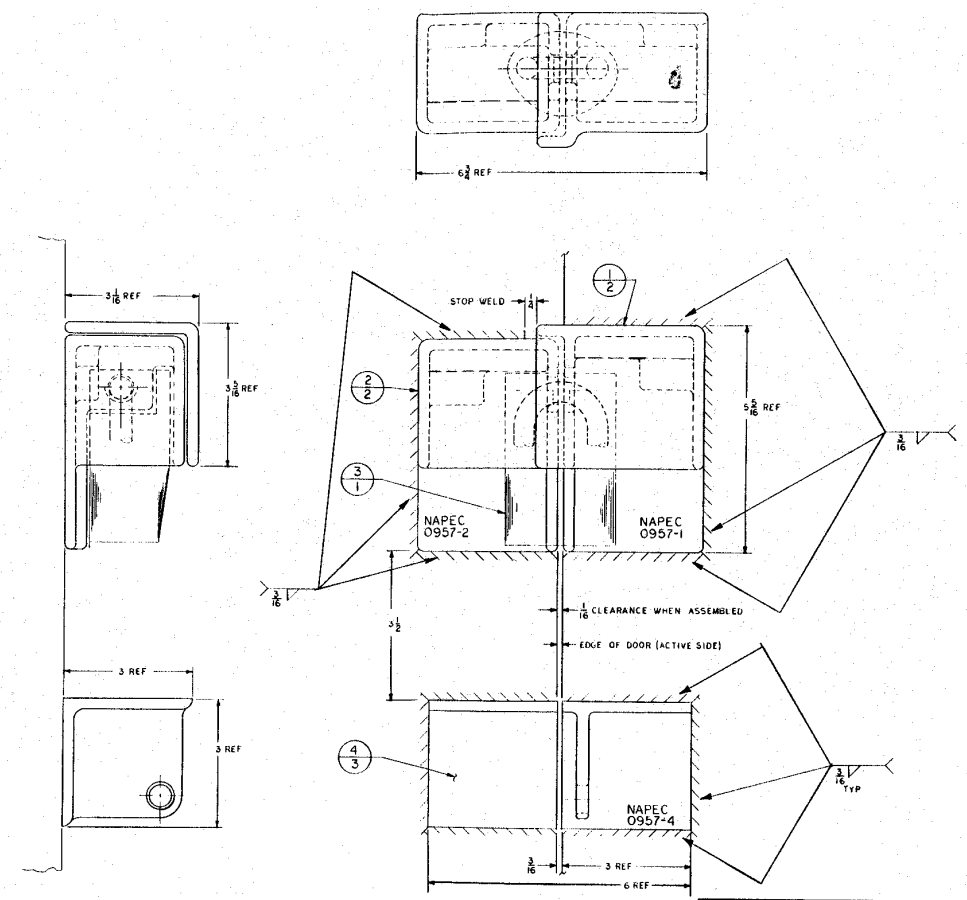

ITEM	NOMENCLATURE	NOTE	QTY	REMARKS
4	BOTTOM ATTACK SHIELD		1	SEE DETAIL
3	PADLOCK	1	1	REF.
2	CLASP		1	SEE DETAIL
1	COVER		1	SEE DETAIL

HIGH SECURITY HASP, HINGED OR SLIDING HORIZONTAL, RH MK 2 MOD 8

ASSEMBLY

DEPARTMENT OF THE NAVY
NAVAL ORDNANCE SYSTEMS COMMAND
NAVAL AMMUNITION PROGRAMS ENGINEERING CENTER
CRANE, INDIANA

NAPEC DRAWING NO. 0957 SHEET 1 OF 3 A

APPROVED 26 Dec 1978

SCALE 1/1 F

G.J. SALLADE 7/77
B.S.M. 12-76
G.J.S. & JEL 10-1-76

REVISIONS					
SYMB	LTR	DESCRIPTION	DATE	APPROVAL	
AEF	A	ADDED 1/2 SG FILLERS TITLE REVISED	5-78	KG	

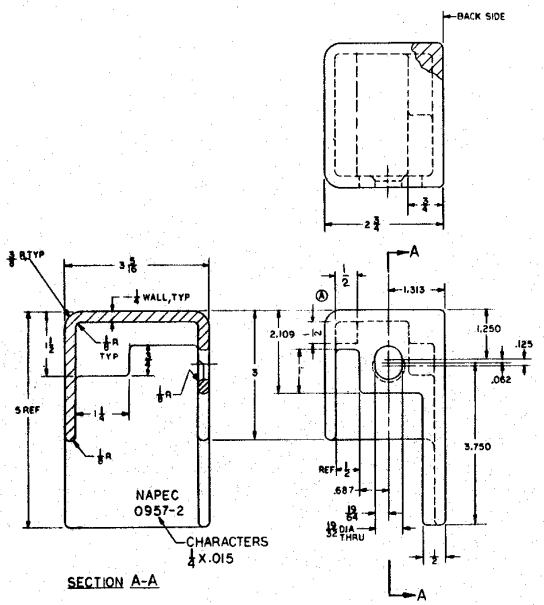

SECTION A-A

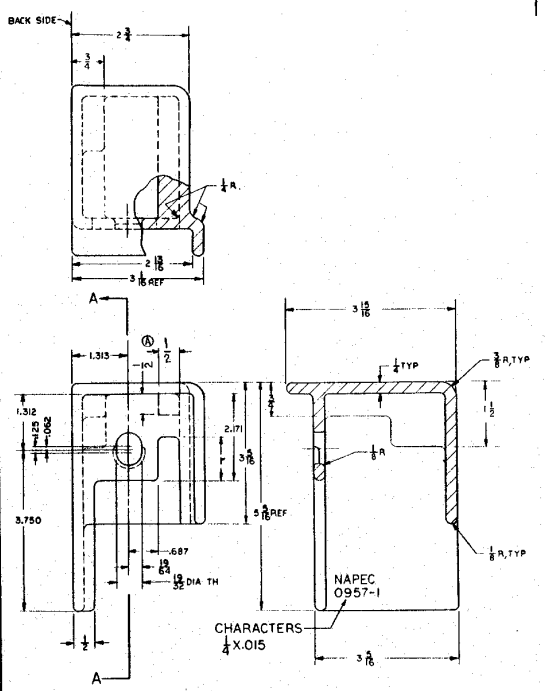

SECTION A-A

(2) OF NAPEC DWG NO. 0957
NAME - CLASP
MATL - INVESTMENT CASTING/MIL-C-6021 CL-2B STAINLESS STEEL CA-6NM
HEAT TREAT - RC 36/40
SURFACE FINISH - NAS-823/C-25
INSP - ZYGLO PER MIL SPEC-I-6866

* SPECIAL NOTE: SEE RECOMMENDED LINEAR TOLERANCES.

(1) OF NAPEC DWG NO. 0957
NAME - COVER
MATL - INVESTMENT CASTING / MIL-C-6021 CL-2B STAINLESS STEEL CA-6NM
HEAT TREAT - RC 36/40
SURFACE FINISH - NAS-823/C-25
INSP - ZYGLO PER MIL-SPEC-I-6866

* SPECIAL NOTE: SEE RECOMMENDED LINEAR TOLERANCE.

* RECOMMENDED LINEAR TOLERANCE	
DIMENSION	NORMAL
UP TO 1/2"	±.007
UP TO 1"	±.010
UP TO 2"	±.013
UP TO 3"	±.016
UP TO 4"	±.019
UP TO 5"	±.022
UP TO 6"	±.025

APPROVED 23 Dec 1976
Chas E. Johnson

DRAWN		
TRACED		
CHECKED		
ENGR		
Ray Stallard	12-76	
NAVY	12-76	
6JSAJEL	10 S 76	

SCALE: FULL | SIZE: F

HIGH SECURITY HASP HINGED OR SLIDING HORIZONTAL RH MK 2 MOD 8

DETAILS

DEPARTMENT OF THE NAVY
NAVAL ORDNANCE STATION LOUISVILLE
NAVAL AMMUNITION PRODUCTION ENGINEERING CENTER
LOUISVILLE, KENTUCKY

NAPEC 0957 SHEET 2 OF 3 | A

NAPEC 0957 SHEET 2 of 3 Y

NOTICE: THE INFORMATION AND DESIGNS CONTAINED HEREIN ARE PROPRIETARY TO THE NAVAL ORDNANCE STATION, INDIAN HEAD, MD. THEY ARE LOANED SUBJECT TO THE AGREEMENT THAT THEY ARE NOT TO BE REPRODUCED, COPIED, LENT OR DISCLOSED IN WHOLE OR IN PART WITHOUT THE WRITTEN PERMISSION OF THE NAVAL ORDNANCE STATION, INDIAN HEAD, MD.

REVISIONS				
ZONE	LTR	DESCRIPTION	DATE	APPROVAL
	A	TITLE REVISED	5-78	

NAPEC 0957 SHEET 3 OF 3 A

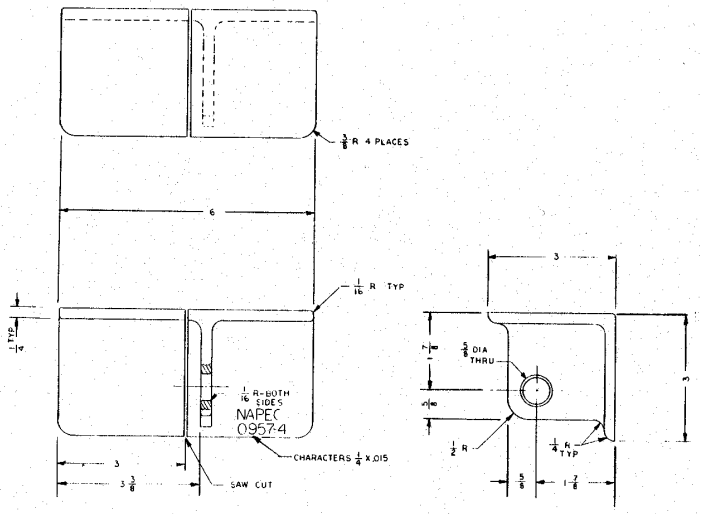

(4) OF NAPEC DWG NO 0957
NAME: BOTTOM ATTACK SHIELD
MATL: INVESTMENT CASTING MIL-C-6021 CL 2B
STAINLESS STEEL CA 6NM

HEAT TREAT: RC 36/40

SURF REQT: NAS 823/C-25
SPECIAL NOTE: LINEAR TOLERANCES

UP TO 1/2"	±.007
" " 1"	±.010
" " 2"	±.013
" " 3"	±.016
" " 4"	±.019
" " 5"	±.022
" " 6"	±.025

INSP: ZYGLO PER MIL SPEC - I-6866 CL 2B

SYMBOLS		APPROVED 23 Dec 1976	HIGH SECURITY HASP HINGED OR SLIDING HORIZONTAL RH MK 2 MOD 8
		DESIGNED	DATE
		DRAWN	DETAIL
		TRACED	NAPEC 0957 A
		CHECKED	SHEET 3 OF 3
		SCALE FULL	SIZE F

DEPARTMENT OF THE NAVY
NAVAL ORDNANCE SYSTEMS COMMAND
NAVAL AMMUNITION PRODUCTION ENGINEERING CENTER
GRAND, INDIANA

NOTICE: [illegible]

NAPEC 0958 SHEET 1 OF 3 A

NOTE:-
1. ITEM 3 TO BE FURNISHED BY CUSTOMER

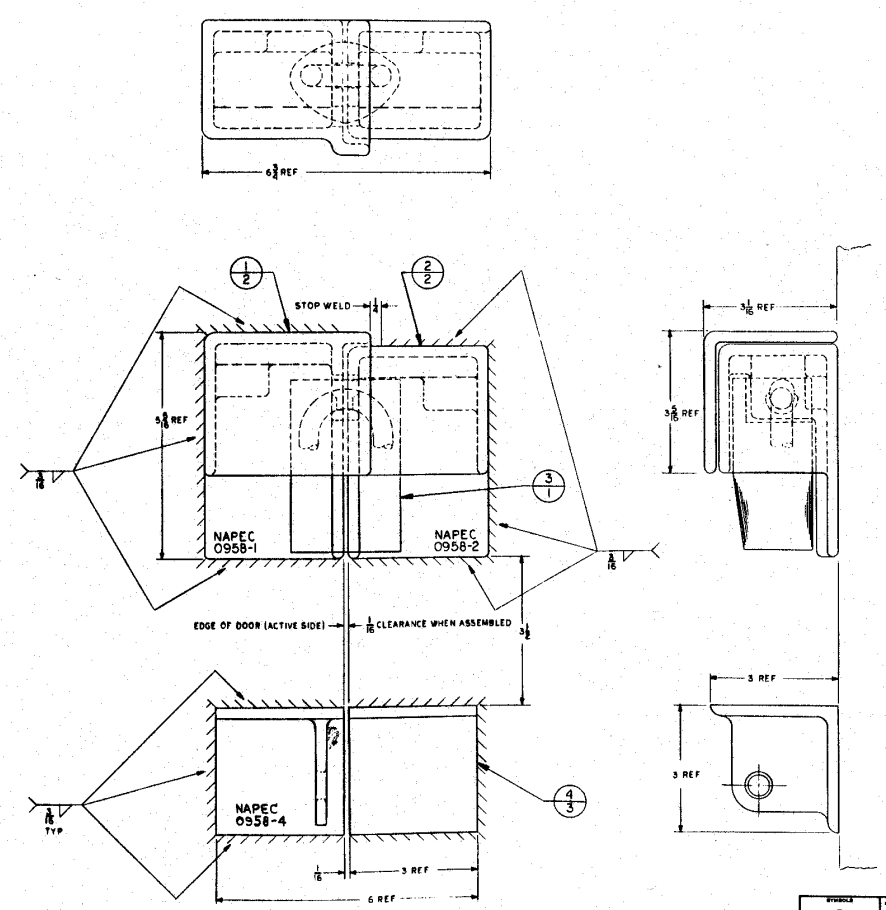

ZONE	LTR	DESCRIPTION	DATE	APPROVAL
	A	ADDED MATL TO 1 & 2 TITLE REVISED	5-78	

ITEM	NOMENCLATURE	NOTE	QTY	REMARKS
4	BOTTOM ATTACK SHIELD		1	SEE DETAIL
3	PADLOCK	1	1	REF.
2	CLASP		1	SEE DETAIL
1	COVER		1	SEE DETAIL

HIGH SECURTY HASP
HINGED OR SLIDING
HORIZONTAL LH
MK 2 MOD 8

ASSEMBLY

DEPARTMENT OF THE NAVY
NAVAL ORDNANCE SYSTEMS COMMAND
NAVAL AMMUNITION PRODUCTION ENGINEERING CENTER
CRANE, INDIANA

NAPEC 0958 SHEET 1 OF 3 A

SCALE 1/1 F

APPROVED 2 3 [illegible] 1976

3,870 12-76
G.J.S & JEL 10-6-76

NAPEC 0958 SHEET 2 OF 3 A

REVISIONS				
ZONE	LTR	DESCRIPTION	DATE	APPROVED
HGE	A	ADDED 1/2 SQ FILLERS TITLE REVISED	5-76	

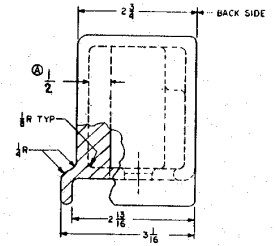

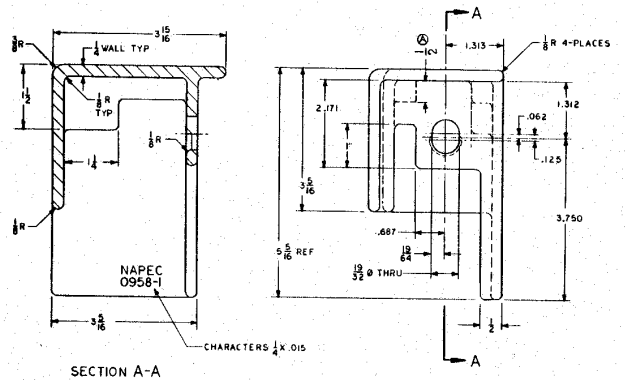

SECTION A-A

(1) OF NAPEC DWG NO: 0958
NAME: COVER
MATL: INVESTMENT CAST/MIL-C-6021 CL-2B
STAINLESS STEEL CA-NM
HEAT TREAT: RC 36-40
SURFACE FINSH: NAS-823/C-25
INSP: ZYGLO PER MIL-SPEC-I-6866
SPECIAL NOTE:
SEE RECOMMENDED LINEAR TOLERANCE

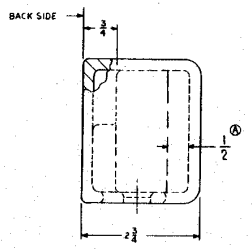

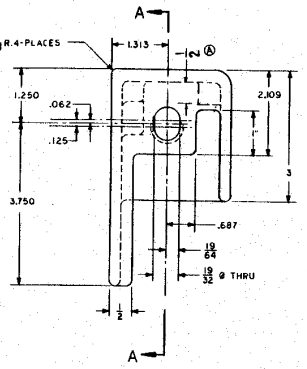

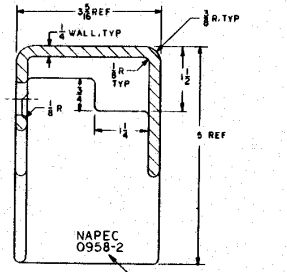

SECTION A-A

(2) OF NAPEC DWG NO: 0958
NAME: CLASP
MATL: INVESTMENT CAST/MIL-C-6021 CL-2B
STAINLESS STEEL CA-6NM
HEAT TREAT: RC 36/40
SURFACE FINSH: NAS 823/C-25
INSP ZYGLO PEP MIL-SPEC-I-6866
SPEC NOTE:
SEE RECOMMENDED LINEAR TOLERANCE

RECOMMENDED LINEAR TOLERANCE	
DIMENSION	NORMAL
UP TO 1"	±.007
UP TO 1"	±.010
UP TO 2"	±.013
UP TO 3"	±.016
UP TO 4"	±.019
UP TO 5"	±.022
UP TO 6"	±.025

HIGH SECURITY HASP
HINGED OR SLIDING
HORIZONTAL LH
MK 2 MOD 8

DETAILS

DEPARTMENT OF THE NAVY
NAPEC 0958 SHEET 2 OF 3 A

ZONE	LTR.	DESCRIPTION	DATE	APPROVAL
	A	TITLE REVISED	5-78	

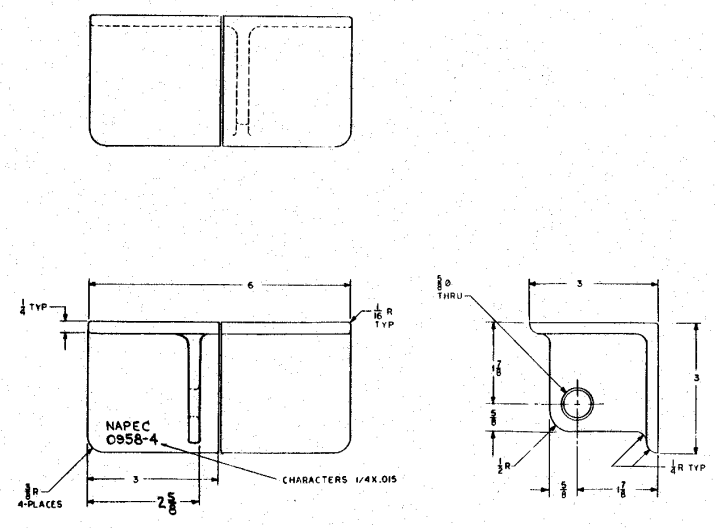

(4) OF NAPEC DWG NO: 0958
NAME: BOTTOM ATTACK SHIELD
MATL: INVESTMENT CASTING/MIL-C-6021 CL-2B
STAINLESS STEEL CA-6NM
HEAT TREAT: RC 36/40
SURF REQT: NAS 823/C-25
SPCL NOTE: LINEAR TOLERANCES

UP	TO	1/2	±.007
"	"	1"	±.010
"	"	2	±.013
"	"	3	±.016
"	"	4	±.019
"	"	5	±.022
"	"	6	±.026

INSP: ZYGLO PER MIL-SPEC-I 6866

APPROVED 23 Dec 1976	HIGH SECURITY HASP HINGED OR SLIDING HORIZONTAL LH MK 2 MOD 8	DEPARTMENT OF THE NAVY	
E J SALLADE 12-76	DETAIL	NAPEC DRAWING NO. 0958	A
SCALE: 1/1	SIZE F	SHEET 3 OF 3	

NOTICE: THIS DRAWING IS THE PROPERTY OF THE NAVY AND IS NOT TO BE REPRODUCED OR DISCLOSED WITHOUT WRITTEN PERMISSION.

NAPEC DRAWING NO. 0958 SHEET 3 OF 3 A

NOTICE: THIS DRAWING AND SERIAL OF THE SECTION WERE DEVELOPED BY THE NAVAL AMMUNITION PROCUREMENT ENGINEERING CENTER AND ARE SUBJECT TO REVISION.

NAPEC DRAWING NO. 0961 SHEET 1 OF 1

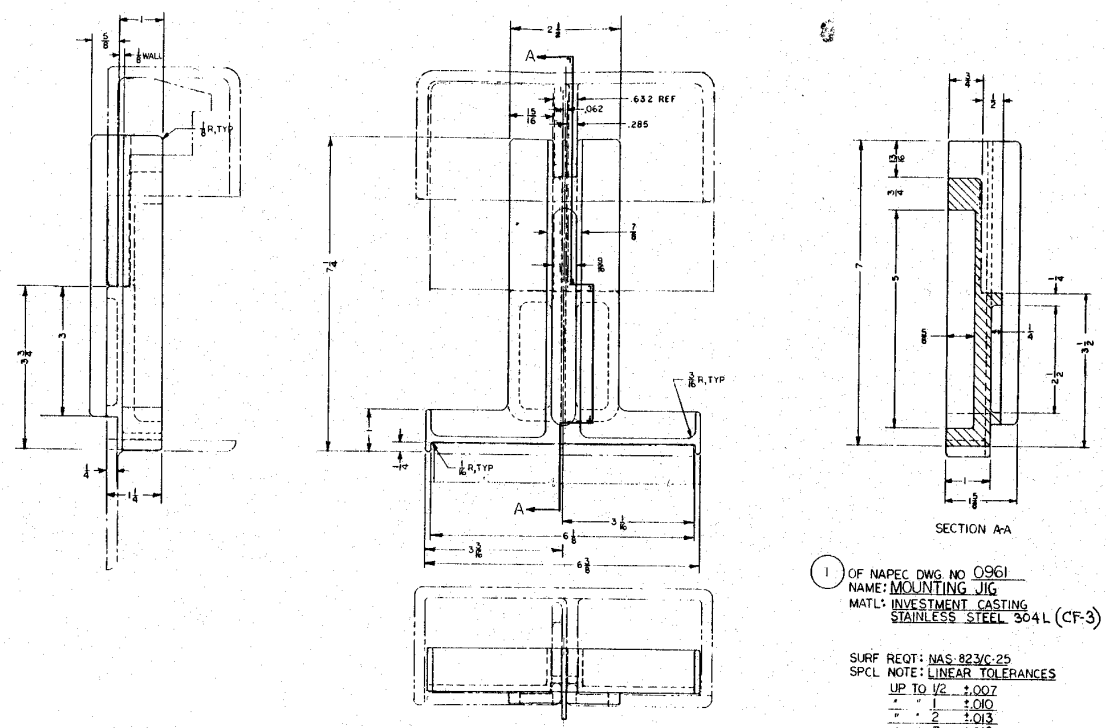

1 OF NAPEC DWG NO 0961
NAME: MOUNTING JIG
MATL: INVESTMENT CASTING
STAINLESS STEEL 304L (CF-3)

SURF REQT: NAS-823/C-25
SPCL NOTE: LINEAR TOLERANCES

UP TO 1/2	±.007
" " 1	±.010
" " 2	±.013
" " 3	±.016
" " 4	±.019
" " 5	±.022

ITEM	NOMENCLATURE	QTY	NOTE	REMARKS
1	MOUNTING JIG	1		

HIGH SECURITY HASP HINGED MK 2 (MOD 7)

MOUNTING JIG

ASSEMBLY & DETAIL

DEPARTMENT OF THE NAVY
NAVAL SEA SYSTEMS COMMAND
NAVAL AMMUNITION PRODUCTION ENGINEERING CENTER
CRANE, INDIANA

NAPEC DRAWING NO. 0961 SHEET 1 OF 1

APPROVED 4 MAR 1977

SCALE 1:1 SIZE F

DRAWN JES 3-22-77

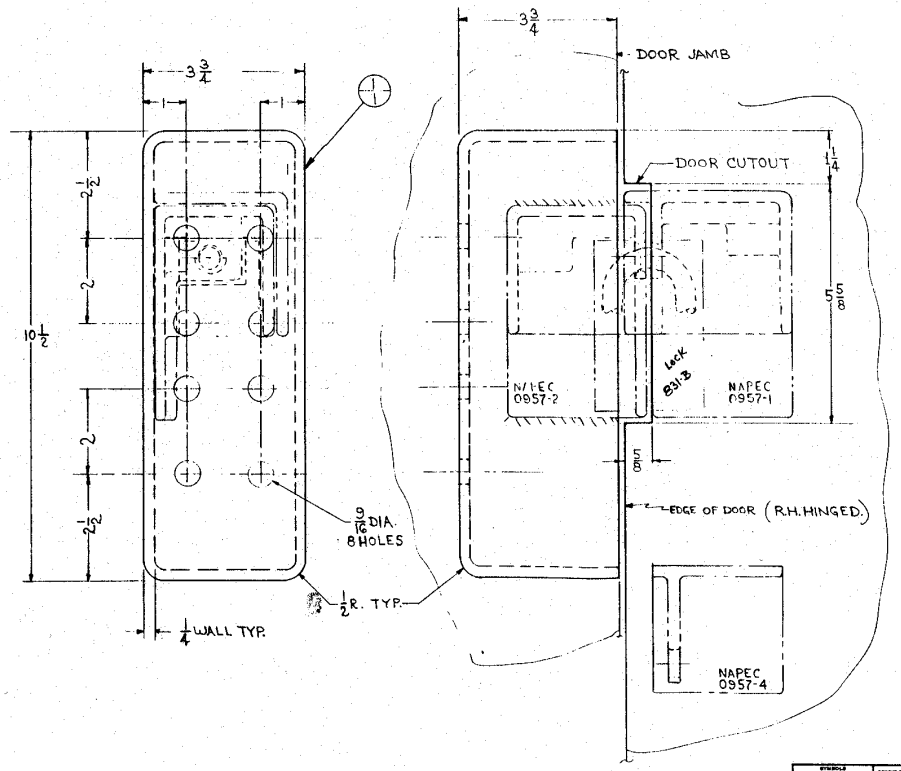

R.H. INSTALLATION SHOWN (0957)
L.H. OPPOSITE (0958)

(1) UNIVERSAL MTG. BOX
MAT'L. STAINLESS STEEL TYPE 316
AMS 5360 OR CF8M ASTM-296
STANDARD TOLERANCES for INVESTMENT CASTINGS, LINEAR & FLATNESS.

WALL MOUNTING BOX for SINGLE DOOR 0957 or 0958 HASP.	DEPARTMENT OF THE NAVY NAVAL SEA SYSTEMS COMMAND NAVAL AMMUNITION PRODUCTION ENGINEERING CENTER CRANE, INDIANA		
ASSY & DETAIL	NAPEC DRAWING NO. 1286	SHEET 1 OF 1	

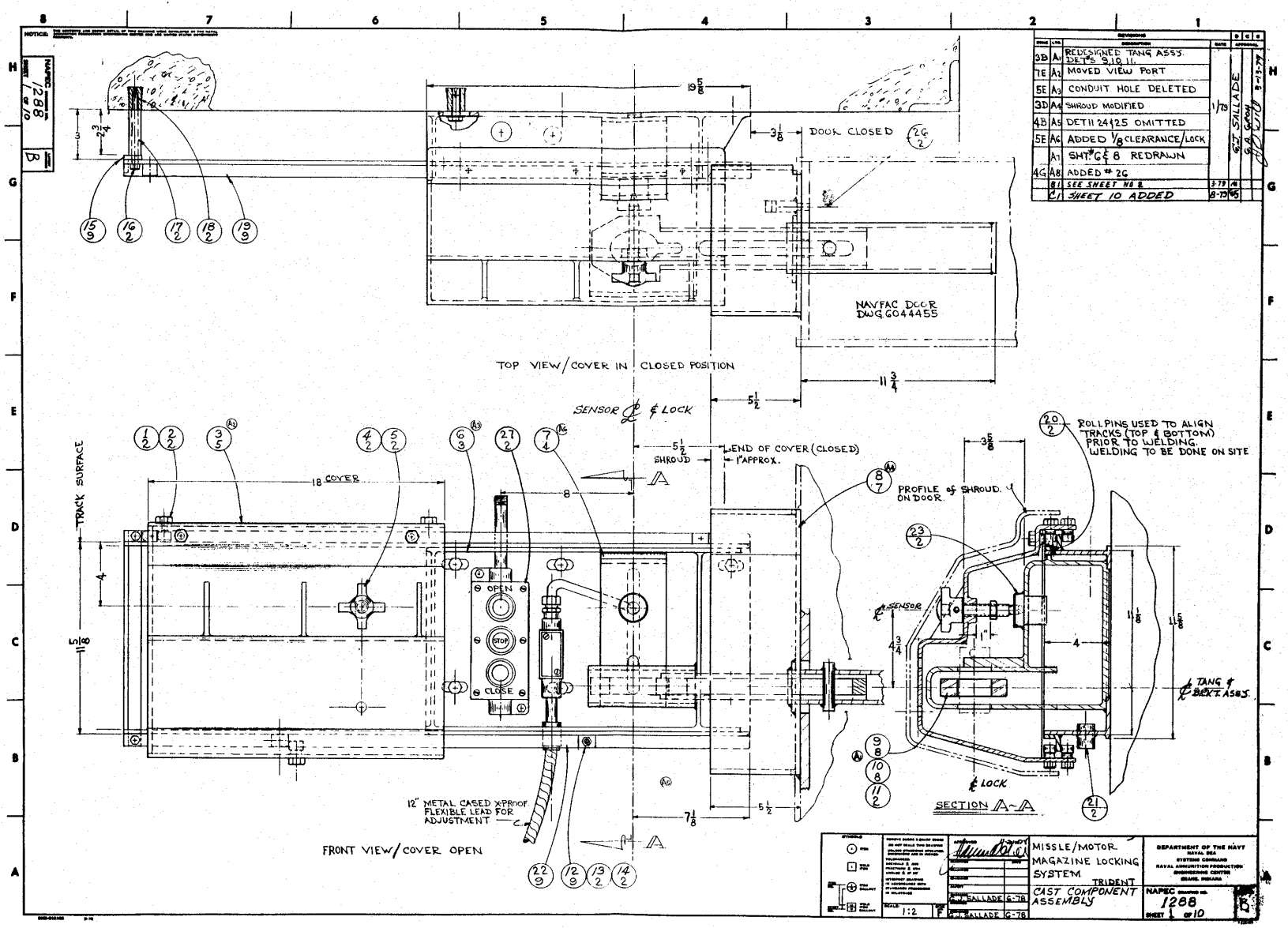

NOTICE:
NAPEC 1288 SHEET 1 of 10
B
REVISIONS
3B A1 REDESIGNED TANG ASSY. DET'S 9,10,11.
7E A2 MOVED VIEW PORT
5E A3 CONDUIT HOLE DELETED
3D A4 SHROUD MODIFIED
4B A5 DET'S 24 & 25 OMITTED
5E A6 ADDED 1/8 CLEARANCE/LOCK
A7 SHT. #6 & 8 REDRAWN
4G A8 ADDED #26
B1 SEE SHEET NO 2
C1 SHEET 10 ADDED
1/79
G.J. SALLADE
3-13-79
DOOR CLOSED
NAVFAC DOOR DWG 6044455
TOP VIEW/COVER IN CLOSED POSITION
SENSOR ℄ & LOCK
END OF COVER (CLOSED)
SHROUD
1" APPROX.
18 COVER
TRACK SURFACE
OPEN
STOP
CLOSE
12" METAL CASED X-PROOF FLEXIBLE LEAD FOR ADJUSTMENT
FRONT VIEW/COVER OPEN
PROFILE of SHROUD ON DOOR
ROLLPINS USED TO ALIGN TRACKS (TOP & BOTTOM) PRIOR TO WELDING. WELDING TO BE DONE ON SITE
℄ SENSOR
℄ TANG & BRKT. ASSY.
℄ LOCK
SECTION A-A
MISSLE/MOTOR MAGAZINE LOCKING SYSTEM
TRIDENT
CAST COMPONENT ASSEMBLY
G.J. SALLADE 6-78
1:2
DEPARTMENT OF THE NAVY
NAVAL SEA SYSTEMS COMMAND
NAVAL AMMUNITION PRODUCTION ENGINEERING CENTER
CRANE, INDIANA
NAPEC 1288
SHEET 1 OF 10
B

REVISIONS						
ZONE	LTR	DESCRIPTION	DATE	APPROVAL		
3 F	AS	DELETE 24 & 25	1 79			
3C	B	1 WAS HINGE PIN 1/2 ⌀ X 4-1/2 L COAT/ANTI-SEIZE LOCTITE #67	3-79	M		

NOTICE: THIS DOCUMENT AND DESIGN DETAIL OF THE NAVIGATION SERIES DESIGNATED BY THE NAVAL ORDNANCE PRODUCTION ENGINEERING CENTER AND SHOWN WITHIN DEPARTMENT OF THE NAVY.

NAPEC DRAWING NO. 1288 SHEET 2 OF 10 B

ITEM	DESCRIPTION	REQD	MATL	SIZE	REMARKS
27	CONTROL (3) P.B.	1	STD	CUTLER HAMMER NOD #10250T NEMA 4 & 13	
26	STAPLE	1	SST	NAPEC 0963-1	GFM
25	DOWEL	1	STD	1/4 DIA X 1" LG.	
24	RINGS	1	SST	SEE DETAIL	
23	SENSOR BODY	1	SST	NAVALEX #28469P1	GFM
22	TRACK, BOTTOM	1	SST	⅃ 1/4 X 1 X 1 X 38	
21	COUPLING STR.	1	SST	1/2 NPT	
20	ROLL PIN	6	SST	1/4 X 1/2 LG	
19	TRACK TOP	1	SST	⅃ 1/4 X 1 X 1 X 38	
18	ANCHORS	2	STD	3/8-16 X 2	RED HEAD EXPANSION #747
17	STANDOFF	2	SST	SCH #40 X 2 3/8 LG.	
16	HEX HD BOLT	2	SST	3/8-16NC 2 X 4 LG	
15	SPACER	1	SST	⅃ 1/4 X 1 X 1 X 13 1/4	
14	HEX-NUT	4	SST	1/4-20NC-2	LOCKTITE "NUT LOCK" @ ASSY.
13	HEX-HD BOLT	4	SST	1/4-20NC-2 X 1 1/2 LG	
12	STOP BLOCK	4	URET HANE	SEE DETAIL	60/90 DUROMETER BLACK
11	STOP PIN	1	SST	3/4 DIA X 3 L	
10	BRACKET	1	SST	SEE DETAIL	
9	TANG	1	SST	SEE DETAIL	
8	SHROUD	1	SST	SEE DETAIL	
7	LOCK & SENSOR	1	SST	SEE DETAIL	
6	MAIN HOUSING	1	SST	SEE DETAIL	
5	HEX-NUT	1	SST	3/4-10 NC-2	LOCKTITE "NUT LOCK" @ ASSY.
4	JACK SCREW	1	SST	NAVALEX DWG #28471A0	GFM
3	COVER	1	SST	SEE DETAIL	
2	HEX-NUT	8	SST	3/8-24UNF-2	LOCKTITE GRADE H @ ASSY.
1	CAM FOLLOWER	8	STD	CTA-21-X 3/4 ⌀ X 1/2	SMITH DIV. of ABC GARWOOD N.J.

SYMBOLS: ⊙ ITEM; ⊡ HOLD ITEM; ⊕ ITEM CALLOUT; ⊕ HOLD ITEM CALLOUT

APPROVED 11-20-78 [signature]

MISSLE/MOTOR MAGAZINE HASP

DEPARTMENT OF THE NAVY
NAVAL SEA SYSTEMS COMMAND
NAVAL AMMUNITION PRODUCTION ENGINEERING CENTER
CRANE, INDIANA

G.J. SALLADE 6/78
B.J. SALLADE 6/78

STOCK LIST

NAPEC DRAWING NO. 1288 SHEET 2 OF 10 B

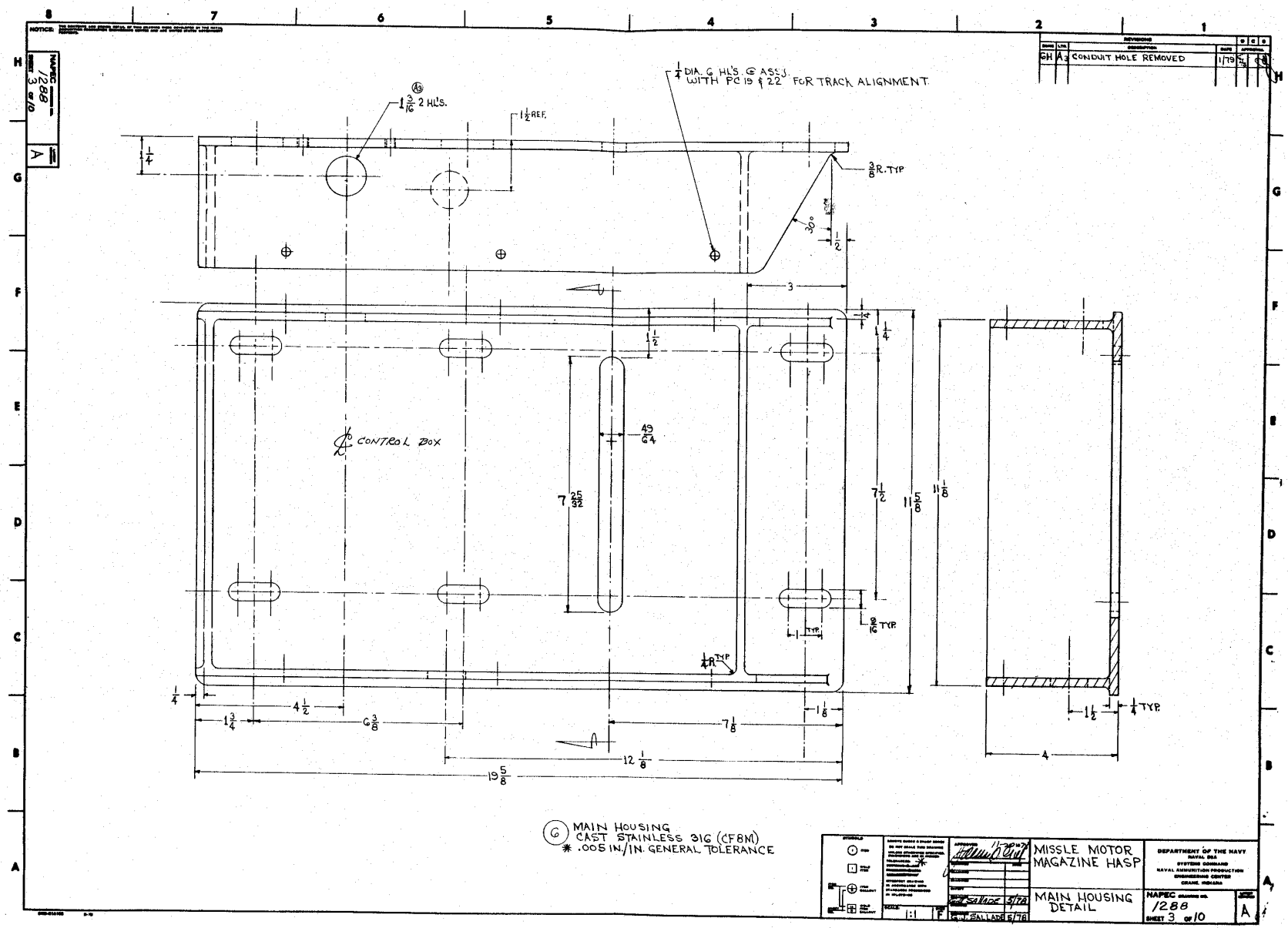

NOTICE:
NAPEC 1288 SHEET 3 OF 10
A
REVISIONS
DESCRIPTION
DATE
APPROVAL
6H A3 CONDUIT HOLE REMOVED 1/79
1/4 DIA. 6 HL'S. @ ASSY. WITH PC 19 & 22 FOR TRACK ALIGNMENT.
1 3/16 2 HL'S.
1 1/2 REF.
3/8 R. TYP
30°
1/2
3
1/4
1 1/4
1 1/2
49/64
7 25/32
7 1/2
11 5/8
11 1/8
9/16 TYP.
1 TYP.
1/4 R. TYP
1/4
4 1/2
1 3/4
6 3/8
7 1/8
1 1/8
12 1/8
19 5/8
1 1/2
1/4 TYP.
4
CONTROL BOX
6 MAIN HOUSING
CAST STAINLESS 316 (CF8M)
* .005 IN./IN. GENERAL TOLERANCE
MISSLE MOTOR MAGAZINE HASP
MAIN HOUSING DETAIL
DEPARTMENT OF THE NAVY
NAVAL SEA SYSTEMS COMMAND
NAVAL AMMUNITION PRODUCTION ENGINEERING CENTER
CRANE, INDIANA
NAPEC 1288
SHEET 3 OF 10
A
1:1
F
G.J. SALLADE 5/78

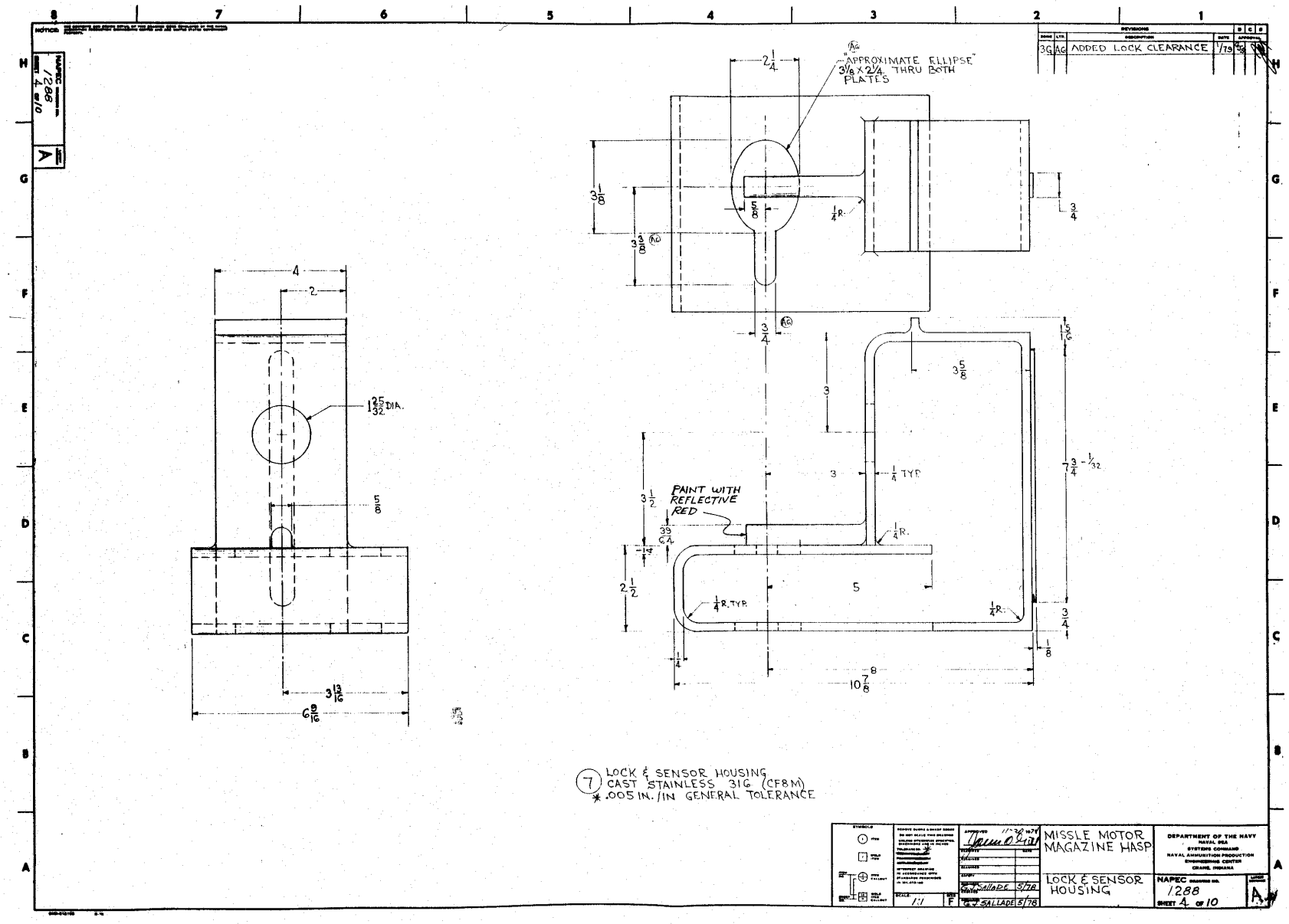

NAPEC 1288 SHEET 4 OF 10
A
REVISIONS
3G AG ADDED LOCK CLEARANCE 1/79
"APPROXIMATE ELLIPSE" 3 1/8 X 2 1/4 THRU BOTH PLATES
PAINT WITH REFLECTIVE RED
1 25/32 DIA.
7 3/4 - 1/32
10 7/8
7 LOCK & SENSOR HOUSING
CAST STAINLESS 316 (CF8M)
* .005 IN./IN GENERAL TOLERANCE
MISSLE MOTOR MAGAZINE HASP
LOCK & SENSOR HOUSING
DEPARTMENT OF THE NAVY
NAVAL SEA SYSTEMS COMMAND
NAVAL AMMUNITION PRODUCTION ENGINEERING CENTER
CRANE, INDIANA
NAPEC 1288
SHEET 4 OF 10
A

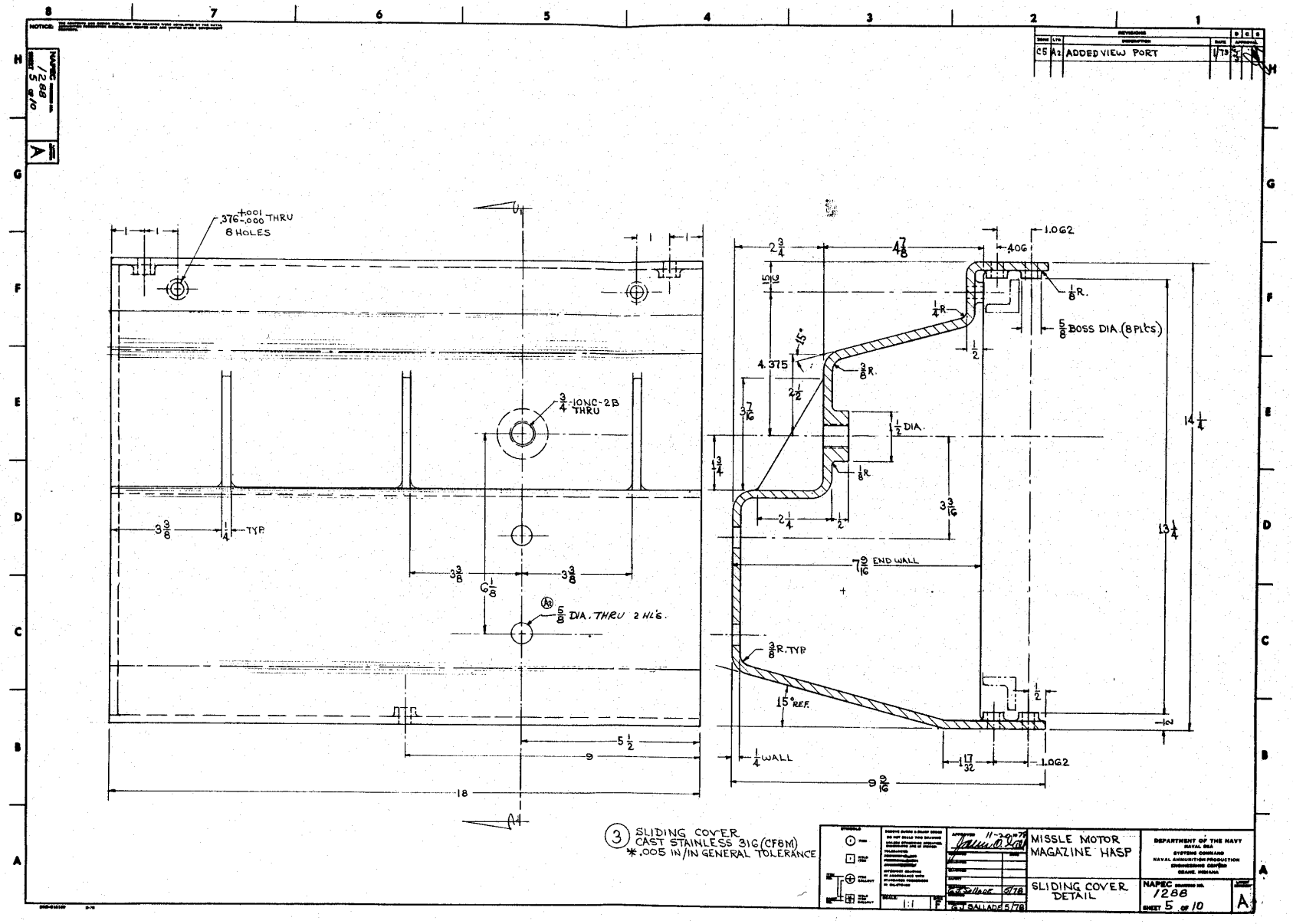

NOTICE:
NAPEC 1288 SHEET 5 of 10
A
C5 A2 ADDED VIEW PORT 1/79
.376 +.001 -.000 THRU 8 HOLES
3/4-10NC-2B THRU
5/8 DIA. THRU 2 HL'S.
3 3/8
1/4 TYP.
6 1/8
5 1/2
9
18
2 3/4
4 7/8
.406
1.062
1/8 R.
5/8 BOSS DIA. (8 PL'CS)
1/4 R.
15°
4.375
3/8 R.
2 1/2
3 7/16
1 1/2 DIA.
1 3/4
1/8 R.
2 1/4
1/2
3 3/16
7 9/16 END WALL
3/8 R. TYP.
15° REF.
1/4 WALL
1 17/32
9 9/16
14 1/4
13 1/4
3 SLIDING COVER
CAST STAINLESS 316 (CF8M)
*.005 IN/IN GENERAL TOLERANCE
MISSLE MOTOR MAGAZINE HASP
SLIDING COVER DETAIL
DEPARTMENT OF THE NAVY
NAVAL SEA SYSTEMS COMMAND
NAVAL AMMUNITION PRODUCTION ENGINEERING CENTER
CRANE, INDIANA
NAPEC 1288
SHEET 5 OF 10
A
1:1
F
G.J. SALLADE 5/78

NOTICE:

REVISIONS				
DWG	LTR	DESCRIPTION	DATE	APPROVAL
	AT	REDRAWN	1-79	

NAPEC 1288 SHEET 6 OF 10 A

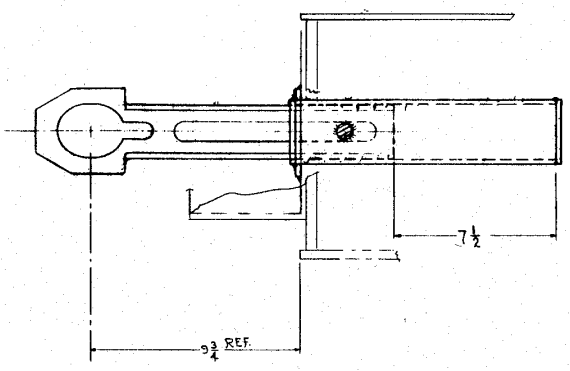

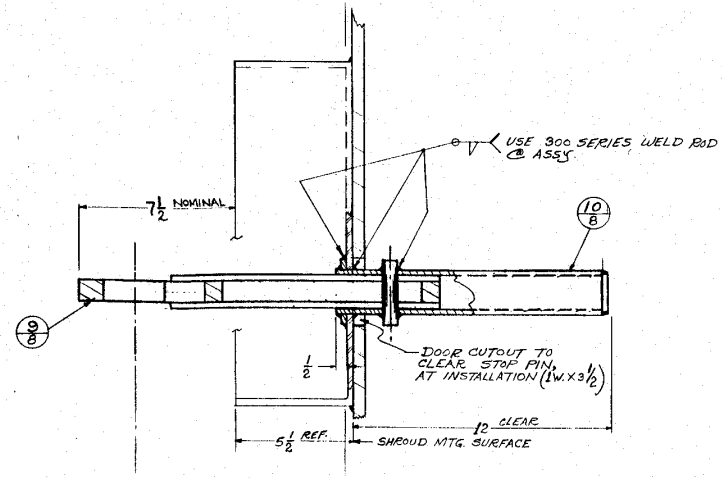

SCALE 1:2	SIZE F	C.J. Sallade 1/79	MISSLE/MOTOR MAGAZINE LOCKING SYSTEM TANG & SLEEVE ASSY LAYOUT

DEPARTMENT OF THE NAVY
NAVAL SEA SYSTEMS COMMAND
NAVAL AMMUNITION PRODUCTION ENGINEERING CENTER
CRANE, INDIANA

NAPEC 1288 SHEET 6 OF 10 A

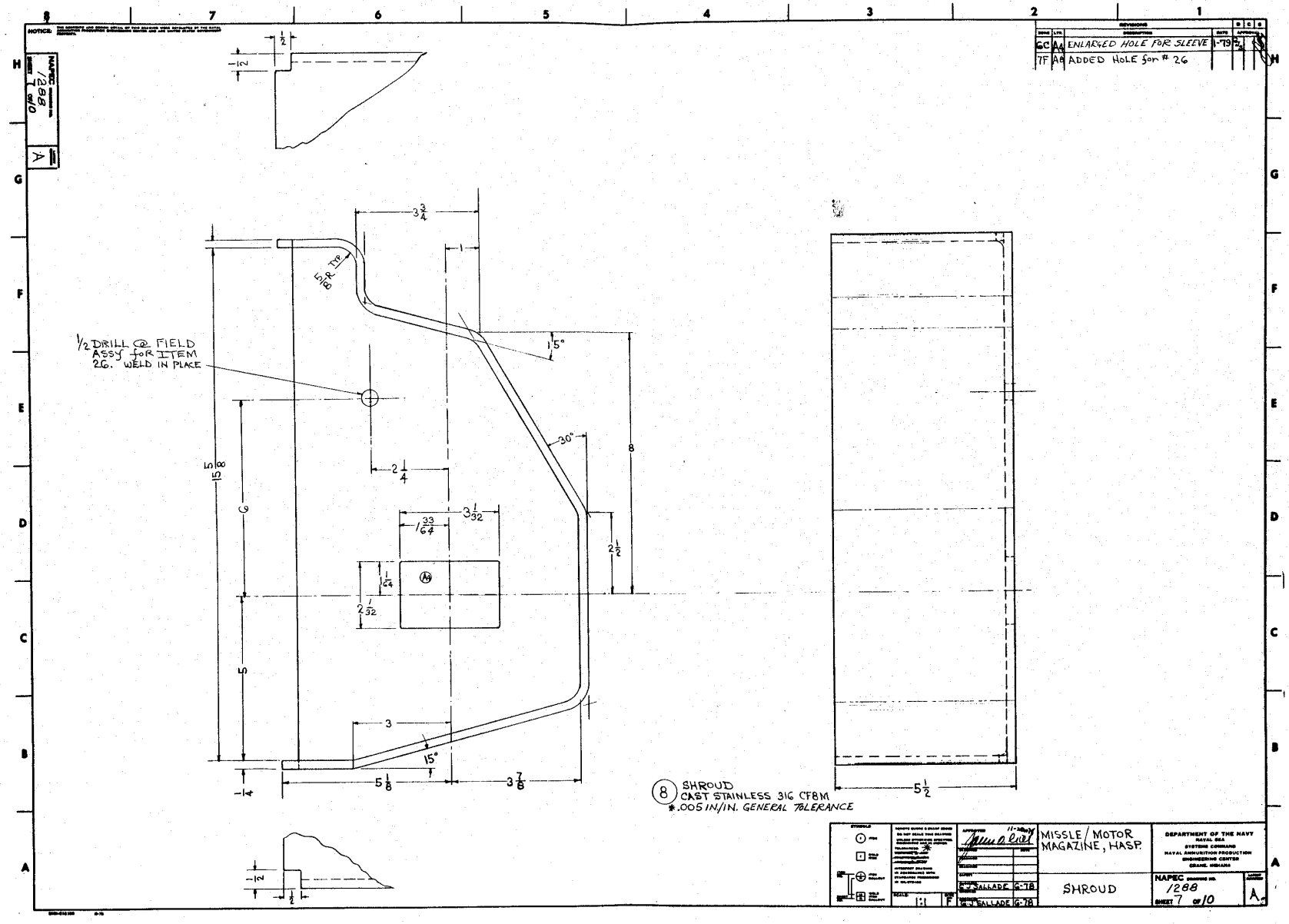

NOTICE:
NAPEC 1288 SHEET 7 of 10
A
REVISIONS
6C A4 ENLARGED HOLE FOR SLEEVE 1-79
7F A8 ADDED HOLE for # 26
1/2 DRILL @ FIELD ASSY for ITEM 26. WELD IN PLACE
5/8 R TYP
15°
30°
15°
3 3/4
1
2 1/4
3 1/32
1 33/64
1/64
2 1/32
2 1/2
8
15 5/8
6
5
3
5 1/8
3 7/8
1/4
5 1/2
1/2
8 SHROUD
CAST STAINLESS 316 CF8M
*.005 IN/IN. GENERAL TOLERANCE
MISSLE / MOTOR MAGAZINE, HASP.
DEPARTMENT OF THE NAVY
NAVAL SEA SYSTEMS COMMAND
NAVAL AMMUNITION PRODUCTION ENGINEERING CENTER
CRANE, INDIANA
SHROUD
NAPEC 1288
SHEET 7 OF 10
A
G.J. SALLADE 6-78
G.J. SALLADE 6-78
1:1
F

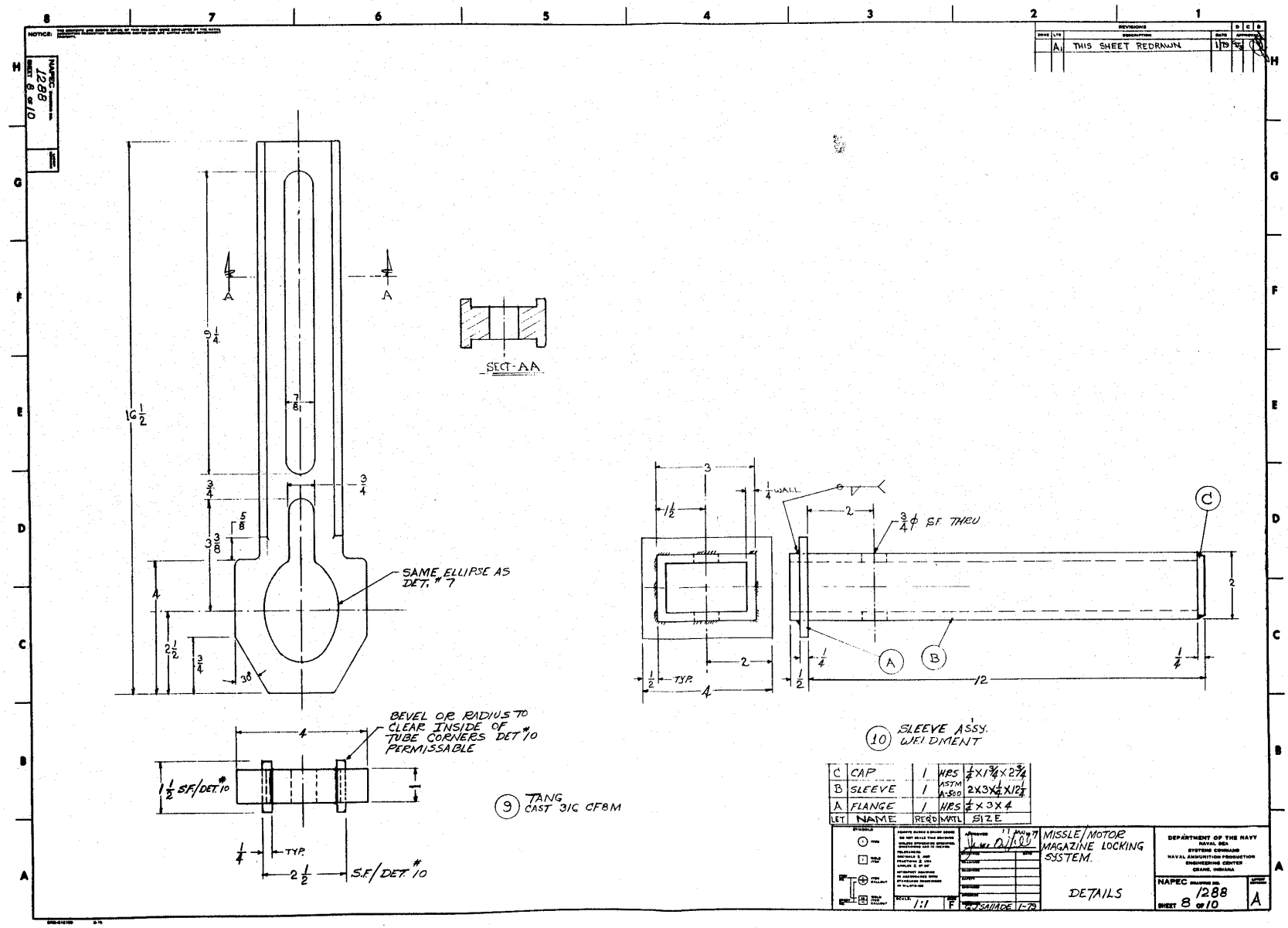

NOTICE:
NAPEC DRAWING NO. 1288
SHEET 8 OF 10
REVISIONS
ZONE LTR DESCRIPTION DATE APPROVED
A1 THIS SHEET REDRAWN 1/79
SECT-AA
SAME ELLIPSE AS DET. #7
BEVEL OR RADIUS TO CLEAR INSIDE OF TUBE CORNERS DET #10 PERMISSABLE
1 1/2 S.F./DET. #10
TYP.
S.F./DET. #10
9 TANG CAST 316 CF8M
1/4 WALL
3/4 ϕ S.F. THRU
10 SLEEVE ASSY. WELDMENT
C CAP 1 HRS 1/4 X 1 3/4 X 2 3/4
B SLEEVE 1 ASTM A-500 2 X 3 X 1/4 X 12 1/4
A FLANGE 1 HRS 1/4 X 3 X 4
LET NAME REQ'D MATL SIZE
MISSLE/MOTOR MAGAZINE LOCKING SYSTEM.
DETAILS
DEPARTMENT OF THE NAVY
NAVAL SEA SYSTEMS COMMAND
NAVAL AMMUNITION PRODUCTION ENGINEERING CENTER
CRANE, INDIANA
NAPEC DRAWING NO. 1288
SHEET 8 OF 10
A
SCALE 1:1
F
G.J. SALLADE 1-79

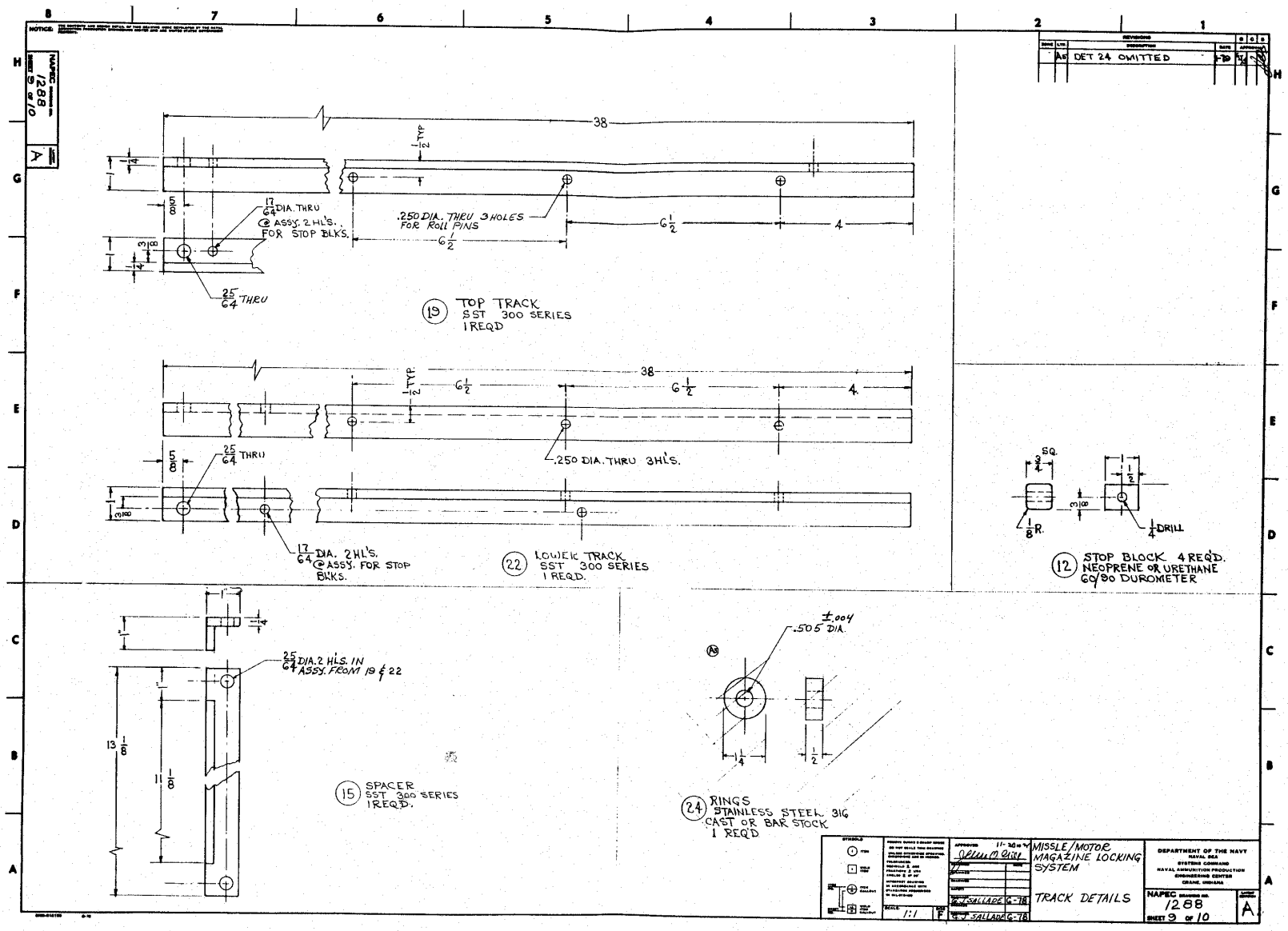

NOTICE
NAPEC DRAWING NO. 1288
SHEET 9 OF 10
A
REVISIONS
A5 DET 24 OMITTED
38
1/2 TYP
1/4
5/8
17/64 DIA. THRU @ ASSY. 2 HL'S. FOR STOP BLKS.
.250 DIA. THRU 3 HOLES FOR ROLL PINS
6 1/2
4
3/8
25/64 THRU
19 TOP TRACK SST 300 SERIES 1 REQD
.250 DIA. THRU 3 HL'S.
17/64 DIA. 2 HL'S. @ ASSY. FOR STOP BLKS.
22 LOWER TRACK SST 300 SERIES 1 REQD.
3/4 SQ.
1/8 R.
1/4 DRILL
12 STOP BLOCK 4 REQ'D. NEOPRENE OR URETHANE 60/90 DUROMETER
25/64 DIA. 2 HL'S. IN ASSY. FROM 19 & 22
13 1/8
11 1/8
15 SPACER SST 300 SERIES 1 REQ'D.
±.004 .505 DIA.
1/4
1/2
24 RINGS STAINLESS STEEL 316 CAST OR BAR STOCK 1 REQ'D
SCALE 1:1
F
G. J. SALLADE 6-78
APPROVED 11-30-79
MISSLE/MOTOR MAGAZINE LOCKING SYSTEM
TRACK DETAILS
DEPARTMENT OF THE NAVY NAVAL SEA SYSTEMS COMMAND NAVAL AMMUNITION PRODUCTION ENGINEERING CENTER CRANE, INDIANA
NAPEC DRAWING NO. 1288
SHEET 9 OF 10
A

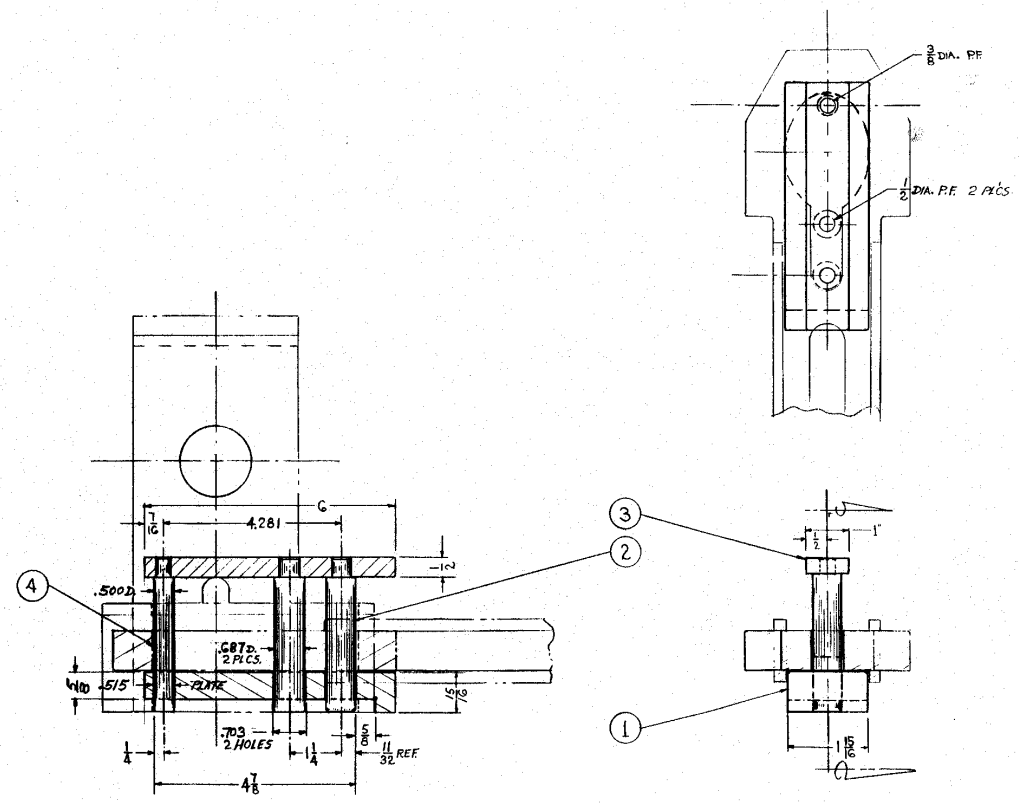

NOTE

ITEM	NOMENCLATURE	REQ'D	MATL	REMARKS
4	PIN	1	D.R.	1/2 ϕ X 4 LG.
3	PIN PL 1/2X1X6 1/4	1	CRS.	CAD. PL OR BLK. OXIDE
2	PIN	2	D.R.	11/16 ϕ X 4" LG.
1	SPACER 1X2X6 1/4	1	CRS	CAD. PL. OR BLK. OXIDE

MISSLE MOTOR MAGAZINE HASP ALIGNMENT FIXTURE (SHROUD ASSY. TO DOOR)

DEPARTMENT OF THE NAVY
NAVAL SEA
SYSTEMS COMMAND
NAVAL AMMUNITION PRODUCTION ENGINEERING CENTER
CRANE, INDIANA

NAPEC DRAWING NO. 1288
SHEET 10 OF 10
C

SCALE 1:1
SIZE F

G. J. SALADE 7/79
G. J. SALADE 7/79

NOTICE: THE CONTENTS AND DESIGN DETAIL OF THIS DRAWING WERE DEVELOPED BY THE NAVAL AMMUNITION PRODUCTION ENGINEERING CENTER AND ARE UNITED STATES GOVERNMENT PROPERTY.

REVISIONS					
ZONE	LTR	DESCRIPTION	DATE	APPROVAL	
	A	CHANGE TO 11"x8½"	2-79	[illegible]	
	B	SEE NOR 1294B	12-84	[illegible]	

NAPEC DRAWING 1294 SHEET 1 OF 3

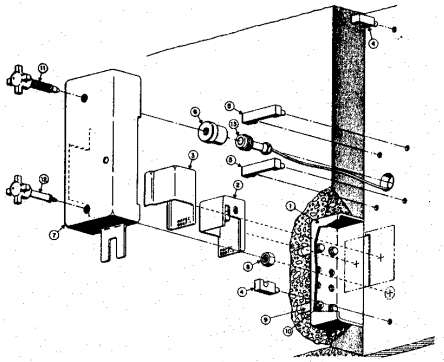

LIST OF MATERIALS

GEM	ITEM	QTY	DESCRIPTION	NAVAL/COMM'L DESIG	
	1	1	WALL MOUNTING BOX	NAPEC DWG 1286	
	2	1	CLASP	5532334	SHT2
	3	1	COVER	5532334	SHT2
	4	2	AIB STAPLE	5532336	SHT2
	5	2	AIB LUG	5532336	SHT2
	6	1	SENSOR BODY	5532336	SHT5
	7	1	AIB HOUSING	5532336	SHT2
	8	1	HOLD DOWN NUT	5532336	SHT3
	9	4	1/2" CONCRETE ANCHOR		
	10	4	1/2" HEX HD CAP SCREW		
	11	1	BAR JACK SCREW, INACTIVE LEAF	5532336	SHT3
	12	1	BAR JACK SCREW, ACTIVE LEAF	5532336	SHT4
	13	1	SENSOR	5532336	SHT5

NOTES:
1. HIGH SECURITY HASP INSTALLATION HEIGHT IS INTENDED TO BE OPERATOR CONVENIENT FOR STRUCTURES WITH A DOCK OR APRON GREATER THAN TWO (2) INCHES BELLOW THE BOTTOM OF THE DOOR, THE HEIGHT DIMENSION SPECIFIED SHOULD BE MEASURED FROM THE SURFACE OF THE DOCK OR APRON IN LIEU OF THE BOTTOM OF THE DOOR.
2. USE WELDING ROD 310-16, 3/32 DIA.

STEP 1

IMPLANT WALL MOUNTING BOX IN JAMB AND SECURE WITH 1/2" CONCRETE ANCHORS.

NOTCH DOOR FOR CLEARANCE.

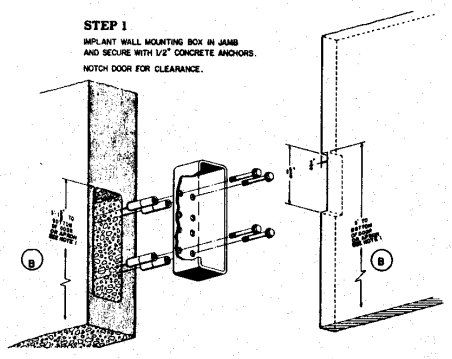

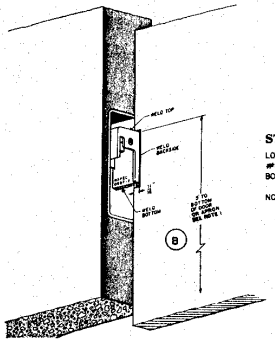

STEP 2

LOCATE AND WELD CLASP #0957-2 TO WALL MOUNTING BOX.

NOTE: FOR INSIDE SWINGING DOORS REPLACE 0957-2 WITH 0958-1.

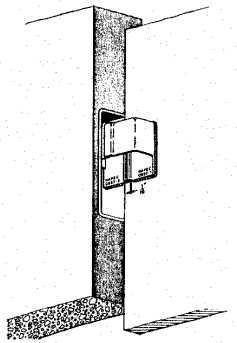

STEP 3

LOCATE HASP COVER 0957-1 ON DOOR FACE AND WELD.

NOTE: FOR INSIDE SWINGING DOORS REPLACE 0957-1 WITH 0958-2.

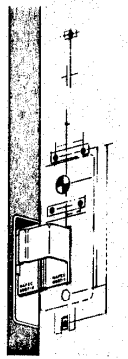

STEP 4

DRAWING #1294 HAS BEEN MADE TO BE USED AS A TEMPLATE. CUT AROUND HEX NUT, HASP COVER #0957-1 AND ALONG JAMB. LOCATE TEMPLATE OVER HASP COVER AND MARK DOOR FOR LOCATING HEX NUT. CENTERPUNCH FOR HOLES AS MARKED.

REMOVE TEMPLATE AND DRILL HOLES AS INDICATED.

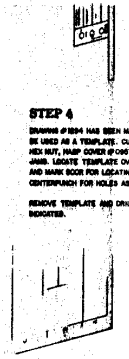

B	B	A
1	2	3
REVISION STATUS OF SHEETS		

SYMBOLS: TYPE; HOLE SIZE; AREA MACHINED; SURFACE MACHINED

REMOVE BURRS & SHARP EDGES DO NOT SCALE THIS DRAWING UNLESS SYSTEM OF OPERATION DIMENSIONS ARE OF NEEDED

APPROVED 3-5-79 [illegible]
DESIGNED [illegible]
DRAWN [illegible]
TRACED [illegible] 3-79
CHECKED KRON 3-79
ENGINEER
PROJECT
SCALE: SIZE F

HIGH SECURITY HASP AND AIB INSTALLATION FOR SINGLE DOORS A SLIDING RIGHT TO OPEN

INSTALLATION PROCEDURES

DEPARTMENT OF THE NAVY
NAVAL SEA SYSTEMS COMMAND
NAVAL AMMUNITION PRODUCTION ENGINEERING CENTER
CRANE, INDIANA

NAPEC DRAWING NO. 1294 REVISION B

SHEET 1 OF 3

0965-012100 2-79

NOTICE: THE CONTENTS AND DESIGN DETAIL OF THIS DRAWING WERE DEVELOPED BY THE NAVAL AMMUNITION PRODUCTION ENGINEERING CENTER AND ARE ENTIRE SYSTEM DEVELOPMENT PROPERTY.

NAPEC DRAWING NO. 1294 SHEET 2 OF 3

ZONE	LTR	REVISIONS DESCRIPTION	DATE	APPROVAL
	A	Change to Title	9-79	
	B	SEE NOR 12948	3/4/80	

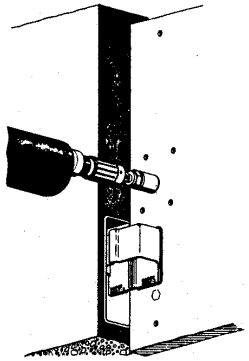

STEP 5

CENTERPUNCH AND DRILL .250 DIA. THRU. ENLARGE HOLE TO 1-3/4" (44 MM) WITH A HOLE SAW EQUIPPED WITH A .250 PILOT.

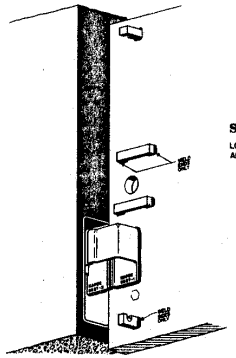

STEP 6

LOCATE LUGS AND STAPLES AND WELD IN PLACE.

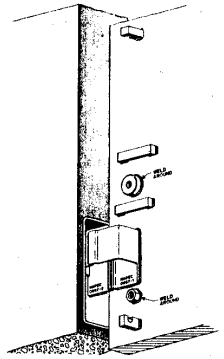

STEP 7

INSERT SENSOR BODY AND WELD IN PLACE.

LOCATE HOLD DOWN NUT AND WELD TO DOOR.

STEP 8

AIB MODIFICATION TO COVER HASP.

NOTE: CUT JAMB SIDE OF AIB ONLY.

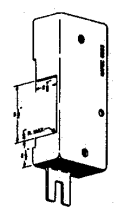

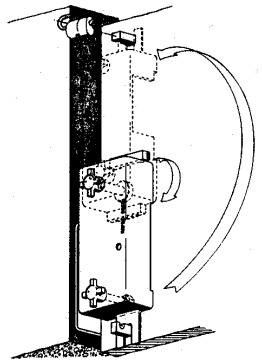

STEP 9

AIB INSTALLED IN SECURE POSITION MINUS LOCK. SENSOR SCREW KNOBS ARE SCREWED DOWN SNUG. TO PLACE AIB IN STORE POSITION, ROTATE AIB COVER 180° AND SECURE TO TOP STAPLE WITH LOCK.

APPROVED	3-5-1979	HIGH SECURITY HASP AND AIB INSTALLATION FOR SINGLE DOORS SLIDING RIGHT TO OPEN	DEPARTMENT OF THE NAVY NAVAL SEA SYSTEMS COMMAND NAVAL AMMUNITION PRODUCTION ENGINEERING CENTER CRANE, INDIANA
DRAWN	3/79	INSTALLATION PROCEDURES	NAPEC DRAWING NO. 1294 SHEET 2 OF 3
CHECKED	3-79		
SCALE	SIZE F		

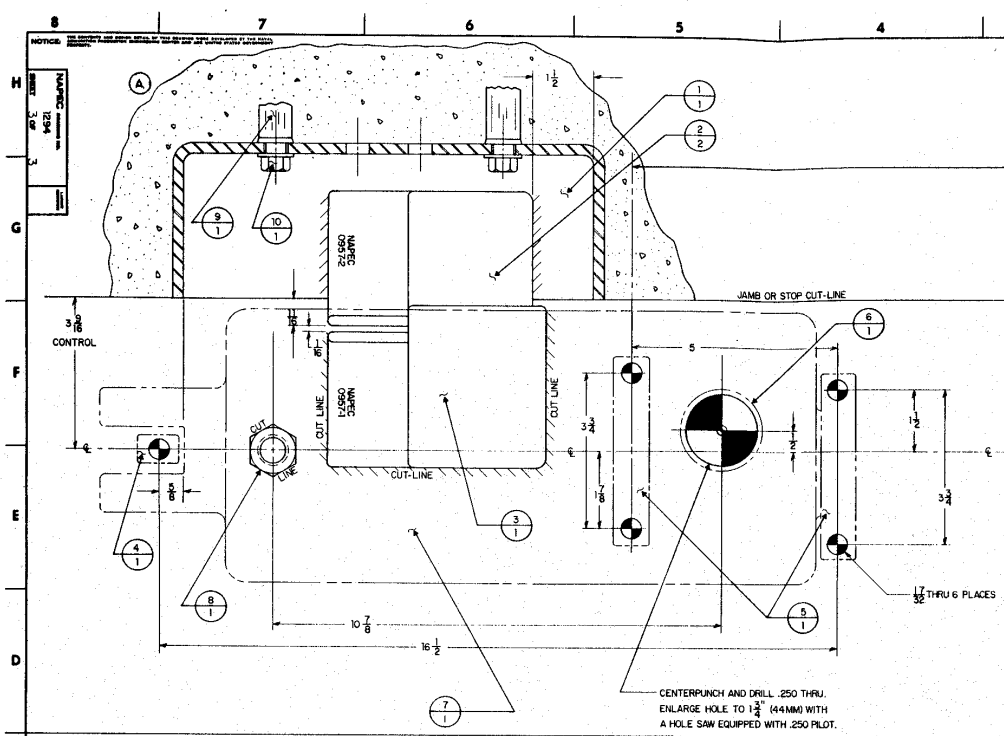

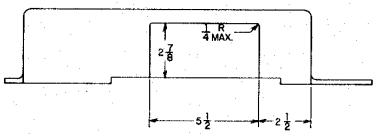

A1B MODIFICATION TO COVER HASP

NOTE: CUT JAMB SIDE OF A1B ONLY

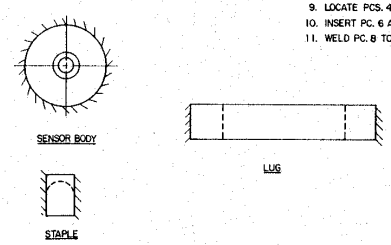

TYPICAL WELDING PLAN

INSTALLATION PROCEDURES

1. IMBED PC. 1 IN JAMB AND SECURE WITH $\frac{1}{2}$" CONCRETE ANCHORS.
2. LOCATE AND WELD PC. 2 TO PC. 1
3. LOCATE PC. 3 ON DOOR FACE $\frac{1}{16}$" FROM PC. 2 AND WELD.
4. THIS DRAWING HAS BEEN MADE TO BE USED AS A TEMPLATE.
5. CUT AROUND HEX NUT, PC. 3, AND ALONG JAMB.
6. LOCATE TEMPLATE OVER PC. 3 AND MARK DOOR FOR LOCATING HEX NUTS.
7. CENTERPUNCH FOR HOLES AS MARKED.
8. REMOVE TEMPLATE AND DRILL ALL HOLES AS INDICATED.
9. LOCATE PCS. 4 & 5 AND WELD IN PLACE.
10. INSERT PC. 6 AND WELD IN PLACE.
11. WELD PC. 8 TO DOOR.

NOTES:

1. THIS DRAWING IS USABLE FOR RIGHT-HAND HINGED DOORS SWINGING OUT.
2. PCS. 2 & 3 CAN BE REPLACED WITH PCS. NAPEC DWG. 0958 ITEMS 1 & 2 RESPECTIVELY FOR RIGHT-HAND HINGED DOORS SWINGING IN.
3. PCS. 4, 5, 6 & 7 SHOWN IN PHANTOM FOR CLARITY.

ITEM	NOMENCLATURE	MAT'L.	NO. REQ'D	REMARKS
10	1/2" HEX HD. CAP SCREW	STD.	2	
9	1/2" CONCRETE ANCHOR	STD.	2	
8	3/4-10 HEX NUT	SS	1	
7	A1B HOUSING 5532336	304 SS	1	SEE DETAIL
6	SENSOR BODY	304 SS	1	SEE NOTE 3
5	A1B LUG (STD) 5532336	304 SS	2	SEE NOTE 3
4	A1B STAPLE (STD) 5532336	304 SS	2	SEE NOTE 3
3	MK 2 MOD 8 RH HASP PC #0957-1	CA6NM	1	SEE NOTE 2
2	MK 2 MOD 8 RH HASP PC #0957-2	CA6NM	1	SEE NOTE 2
1	WALL MOUNTING BOX NAPEC DWG. 1286	316SS	1	

REVISIONS

ZONE	LTR	DESCRIPTION	DATE	APPROVAL
	A	SEE NOR 1294B		

HIGH SECURITY HASP AND A1B INSTALLATION FOR SINGLE DOORS SLIDING RIGHT TO OPEN

INSTALLATION DETAILS

DEPARTMENT OF THE NAVY
NAVAL SEA SYSTEMS COMMAND
NAVAL AMMUNITION PRODUCTION ENGINEERING CENTER
CRANE, INDIANA

NAPEC DRAWING NO. 1294

SHEET 3 OF 3

SCALE: FULL

SIZE: F

APPROVED 2-5-79

DRAWN 3/79

CHECKED 3-79

NOTICE: THIS CONTENTS AND DESIGN DETAIL OF THIS DRAWING WERE DEVELOPED BY THE NAVAL AMMUNITION PRODUCTION ENGINEERING CENTER AND ARE UNDER STATE DEVELOPMENT PROPERTY.

NAPEC DRAWING NO. 1294 SHEET 3 OF 3

REVISIONS						
ZONE	LTR.	DESCRIPTION	DATE	APPROVAL		
A 1	A	CHANGE TO TITLE	9-77			
E 5	B	ADDED NOTES 1&2	10-82	JF		
	C	SEE NOR 1295C	3/6/85			

NOTICE: THE CONTENTS AND DESIGN SHOWN ON THIS DRAWING ARE COPYRIGHTED BY THE NAVAL AMMUNITION PRODUCTION ENGINEERING CENTER AND ARE UNDER STRICT INSTRUMENTS PROPERTY.

NAPEC DRAWING NO. 1295 SHEET 1 OF 3

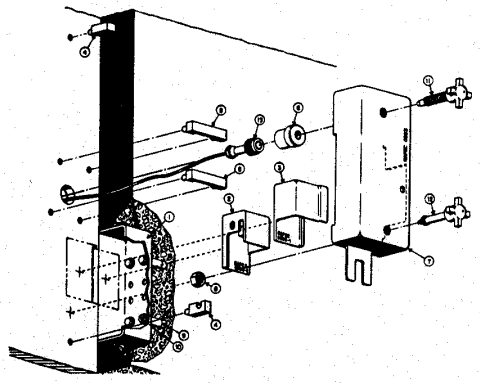

LIST OF MATERIALS

GEM	ITEM	QTY	DESCRIPTION	NAVAL/COMM'L DESIG	
	1	1	WALL MOUNTING BOX	NAPEC DWG 1286	
	2	1	CLASP	5532335	SHT2
	3	1	COVER	5532335	SHT2
	4	2	AIB STAPLE	5532336	SHT2
	5	2	AIB LUG	5532336	SHT2
	6	1	SENSOR BODY	5532336	SHT5
	7	1	AIB HOUSING	5532336	SHT2
	8	1	HOLD DOWN NUT	5532336	SHT3
	9	4	1/2" CONCRETE ANCHOR		
	10	4	1/2" HEX HD CAP SCREW		
	11	1	BAR JACK SCREW, INACTIVE LEAF	5532336	SHT3
	12	1	BAR JACK SCREW, ACTIVE LEAF	5532336	SHT4
	13	1	SENSOR	5532336	SHT5

NOTES:
1. HIGH SECURITY HASP INSTALLATION HEIGHT IS INTENDED TO BE OPERATOR CONVENIENT. FOR STRUCTURES WITH A DOCK OR APRON GREATER THAN TWO (2) INCHES BELOW THE BOTTOM OF THE DOOR, THE HEIGHT DIMENSION SPECIFIED SHOULD BE MEASURED FROM THE SURFACE OF THE DOCK OR APRON IN LIEU OF THE BOTTOM OF THE DOOR.
2. USE WELDING ROD 310-16, 3/32 DIA.

STEP 1

IMPLANT WALL MOUNTING BOX IN JAMB AND SECURE WITH 1/2" CONCRETE ANCHORS.

NOTCH DOORS FOR CLEARANCE.

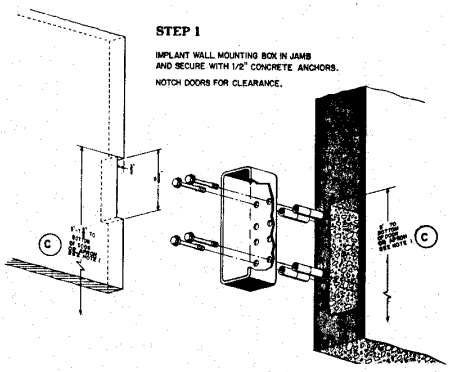

STEP 2

LOCATE AND WELD CLASP #0958-2 TO WALL MOUNTING BOX.

NOTE. FOR INSIDE SWINGING DOORS REPLACE #0958-2 WITH #0957-1.

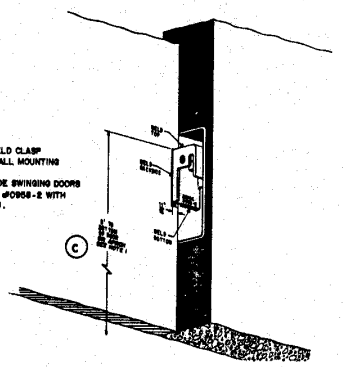

STEP 3

LOCATE HASP COVER #0958-1 ON DOOR FACE AND WELD.

NOTE: FOR INSIDE SWINGING DOORS REPLACE #0958-1 WITH #0957-2.

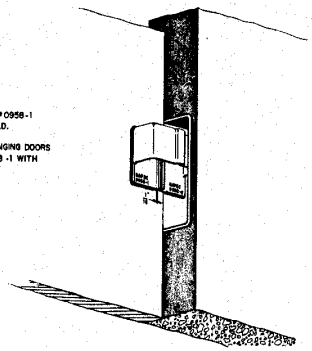

STEP 4

DRAWING #1295 HAS BEEN MADE TO BE USED AS A TEMPLATE. CUT AROUND HEX NUT, HASP COVER #0958-1 AND ALONG JAMB. LOCATE TEMPLATE OVER HASP COVER AND MARK DOOR FOR LOCATING HEX NUT. CENTERPUNCH FOR HOLES AS MARKED.

REMOVE TEMPLATE AND DRILL HOLES AS INDICATED.

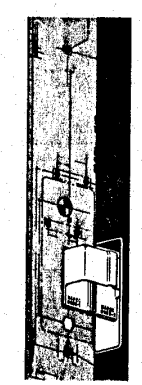

C	C	A
1	2	3
REVISION STATUS OF SHEETS		

SYMBOLS: ITEM; WELD ITEM; WELD ALLOY; WELD ITEM ALLOY

REMOVE BURRS & SHARP EDGES. DO NOT SCALE THIS DRAWING. UNLESS OTHERWISE SPECIFIED DIMENSIONS ARE IN INCHES.

APPROVED 3-5-79

DRAWN 3/79

CHECKED BROH 3-79

SCALE: SHEET F

HIGH SECURITY HASP AND AIB INSTALLATION FOR SINGLE DOORS (A) SLIDING LEFT TO OPEN

INSTALLATION PROCEDURES

DEPARTMENT OF THE NAVY
NAVAL SEA
SYSTEMS COMMAND
NAVAL AMMUNITION PRODUCTION ENGINEERING CENTER
CRANE, INDIANA

NAPEC DRAWING NO. 1295

SHEET 1 OF 3

NOTICE: THE DRAWINGS AND SPECIFICATIONS AS INSTRUMENTS OF SERVICE ARE AND SHALL REMAIN THE PROPERTY OF THE NAVAL ORDNANCE STATION, INDIANHEAD AND ARE NOT TO BE USED IN ANY WAY DETRIMENTAL TO THE NAVAL INTEREST.

REVISIONS					
ZONE	LTR	DESCRIPTION	DATE	APPROVED	
A 1	A	CHANGE TO TITLE	9-77		
	B	———			
	C	SEE NOR 12950			

NAPEC 1295 SHEET 2 OF 3

STEP 5

CENTERPUNCH AND DRILL .250 DIA. THRU. ENLARGE HOLE TO 1-3/4" (44 MM) WITH A HOLE SAW EQUIPPED WITH A .250 PILOT.

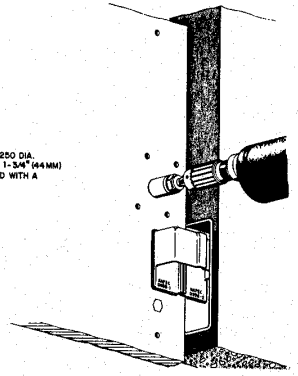

STEP 6

LOCATE LUGS AND STAPLES AND WELD IN PLACE.

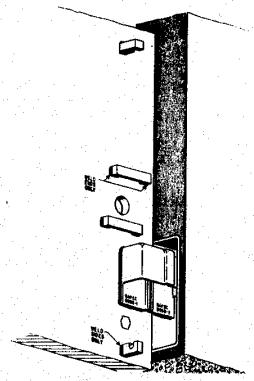

STEP 7

INSERT SENSOR BODY AND WELD IN PLACE.

LOCATE HOLD DOWN NUT AND WELD TO DOOR.

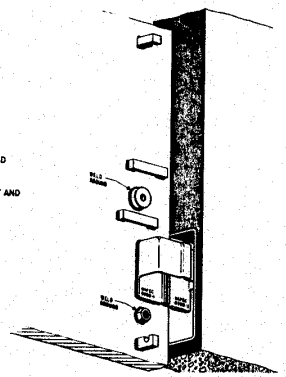

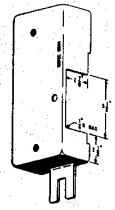

STEP 8

AIB MODIFICATION TO COVER HASP.

NOTE: CUT JAMB SIDE OF AIB ONLY.

STEP 9

AIB INSTALLED IN SECURE POSITION MINUS LOCK. SENSOR SCREW KNOBS ARE SCREWED DOWN SNUG. TO PLACE AIB IN STORE POSITION, ROTATE AIB COVER 180° AND SECURE TO TOP STAPLE WITH LOCK.

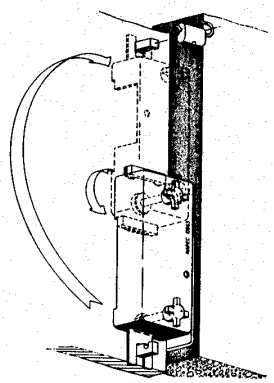

SYMBOLS

DRAWING NUMBER & SHEET SIZES DO NOT SCALE THIS DRAWING UNLESS OTHERWISE SPECIFIED. DIMENSIONS ARE IN INCHES.

SCALE:

APPROVED	Allan O Dine	3-5-80
DESIGNED		
DRAWN	Tall	3/79
TRACED	BAGH	3-79
CHECKED		

HIGH SECURITY HASP AND AIB INSTALLATION FOR SINGLE DOORS (A) SLIDING LEFT TO OPEN

INSTALLATION PROCEDURES

DEPARTMENT OF THE NAVY
NAVAL SEA SYSTEMS COMMAND
NAVAL AMMUNITION PRODUCTION ENGINEERING CENTER
CRANE, INDIANA

NAPEC DRAWING NO. 1295
SHEET 2 OF 3

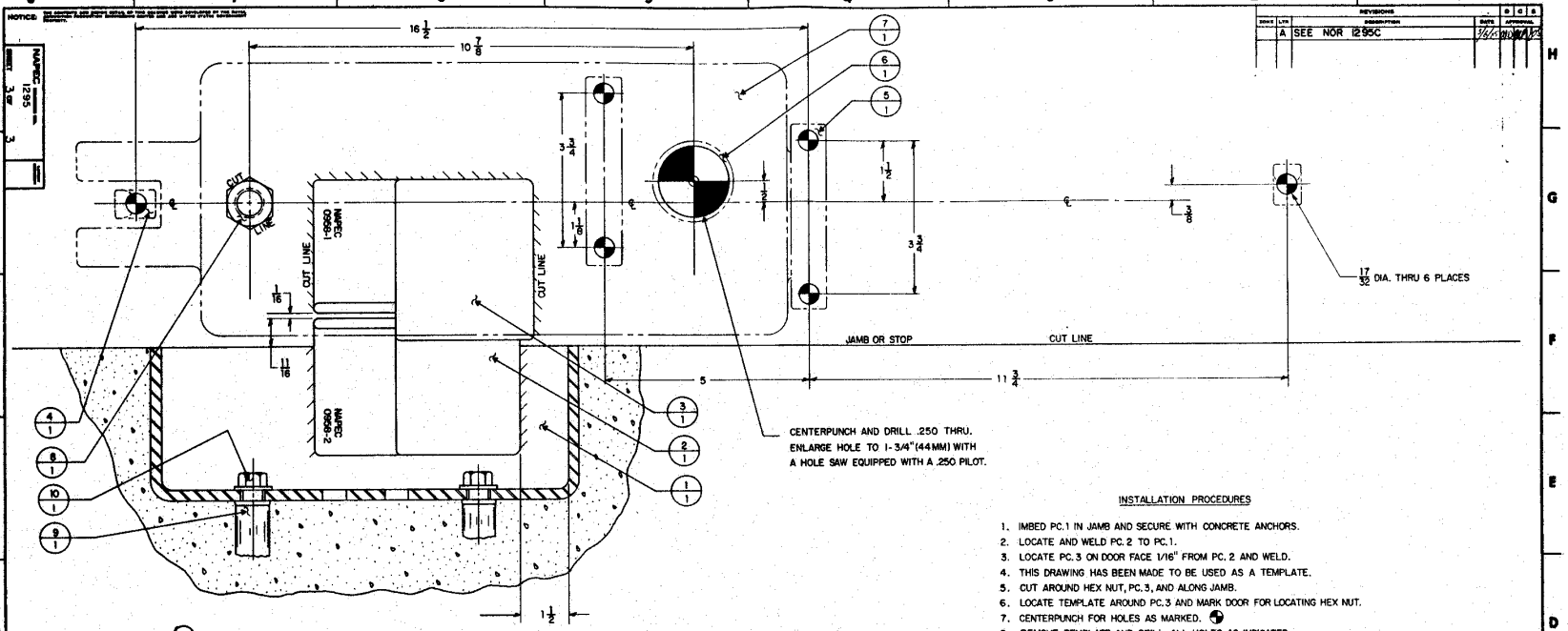

INSTALLATION PROCEDURES

1. IMBED PC.1 IN JAMB AND SECURE WITH CONCRETE ANCHORS.
2. LOCATE AND WELD PC.2 TO PC.1.
3. LOCATE PC.3 ON DOOR FACE 1/16" FROM PC.2 AND WELD.
4. THIS DRAWING HAS BEEN MADE TO BE USED AS A TEMPLATE.
5. CUT AROUND HEX NUT, PC.3, AND ALONG JAMB.
6. LOCATE TEMPLATE AROUND PC.3 AND MARK DOOR FOR LOCATING HEX NUT.
7. CENTERPUNCH FOR HOLES AS MARKED.
8. REMOVE TEMPLATE AND DRILL ALL HOLES AS INDICATED.
9. LOCATE PCS. 4 & 5 AND WELD IN PLACE.
10. INSERT PC.6 AND WELD IN PLACE.
11. WELD PC.8 TO DOOR.

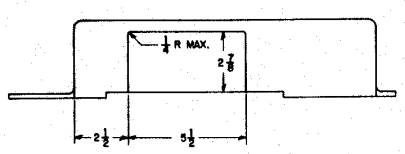

A1B MODIFICATION TO COVER HASP

NOTE: CUT JAMB SIDE OF A1B ONLY

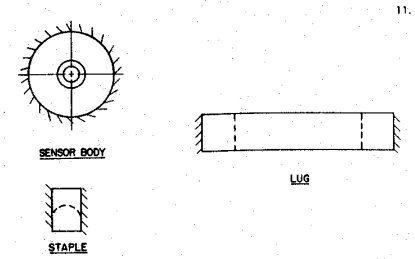

TYPICAL WELDING PLAN

NOTES:

1. THIS DRAWING IS USABLE FOR LEFT-HAND HINGED DOORS SWINGING OUT.
2. PCS. 2 & 3 CAN BE REPLACED WITH PCS. NAPEC DWG. 0957 ITEMS 1 & 2 RESPECTIVELY FOR LEFT-HAND HINGED DOORS SWINGING IN.
3. PCS. 4, 5, 6 & 7 SHOWN IN PHANTOM FOR CLARITY.

ITEM	NOMENCLATURE	MAT'L.	NO. REQ'D	REMARKS
10	1/2" HEX HD. CAP SCREW	STD.	2	
9	1/2" CONCRET ANCHOR	STD.	2	
8	3/4-10 HEX NUT	SS	1	
7	A1B HOUSING 5532336	304 SS	1	SEE DETAIL
6	SENSOR BODY	304 SS	1	SEE NOTE 3
5	A1B LUG (STD) 5532336	304 SS	2	SEE NOTE 3
4	A1B STAPLE (STD) 5532336	304 SS	2	SEE NOTE 3
3	MK2 MOD 8 LH HASP PC. #0958-1	CA6NM	1	SEE NOTE 2
2	MK2 MOD 8 LH HASP PC. #0958-2	CA6NM	1	SEE NOTE 2
1	WALL MOUNTING BOX NAPEC DWG. 1286	316 SS	1	

HIGH SECURITY HASP AND A1B INSTALLATION FOR SINGLE DOORS SLIDING LEFT TO OPEN

INSTALLATION DETAILS

DEPARTMENT OF THE NAVY
NAVAL SEA SYSTEMS COMMAND
NAVAL AMMUNITION PRODUCTION ENGINEERING CENTER
CRANE, INDIANA

NAPEC DRAWING NO. 1295

SHEET 3 OF 3

SCALE FULL

REVISIONS			
ZONE	LTR	DESCRIPTION	DATE
	A	SEE NOR 1295C	3/6/75

NOTICE: THE CONTENTS AND DESIGN DETAIL OF THIS DRAWING WERE DEVELOPED BY THE NAVAL ORDNANCE PRODUCTION ENGINEERING CENTER AND ARE UNITED STATES GOVERNMENT PROPERTY.

REVISIONS						
ZONE	LTR.	DESCRIPTION	DATE	APPROVAL		
	A	SEE NOR 1297 A				

NAPEC DRAWING NO. 1297 SHEET OF

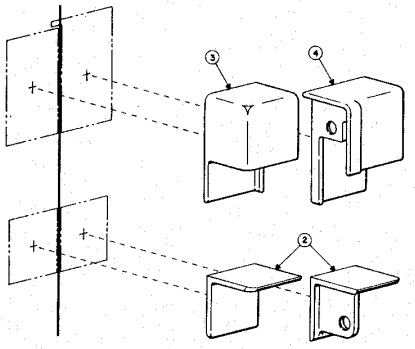

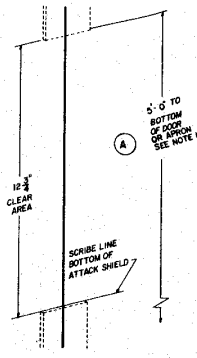

STEP 1

CUT AWAY 12-3/4 INCHES OF ASTRAGAL FROM MAGAZINE DOOR IF ASTRAGAL IS PRESENT.

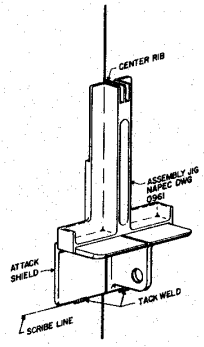

STEP 2

ASSEMBLE ASSEMBLY JIG AND BOTTOM ATTACK SHIELD AND POSITION AS SHOWN WITH THE CENTER RIB OF THE JIG BETWEEN THE TWO DOORS AND THE LOWER EDGE OF THE ATTACK SHIELD ON THE SCRIBED LINE.

TACK WELD ATTACK SHIELD IN PLACE TO APPROPRIATE DOORS.

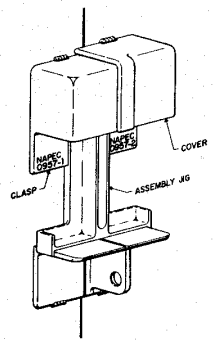

STEP 3

POSITION HASP SECTIONS IN ASSEMBLY JIG AS SHOWN AND TACK WELD IN PLACE

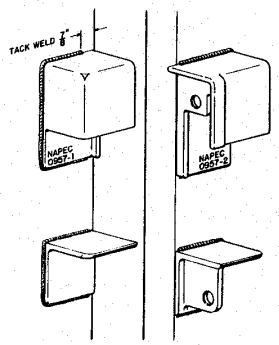

STEP 4

REMOVE ASSEMBLY JIG. OPEN DOOR AND FINISH WELDING.

CAUTION

DO NOT WELD ON DOOR EDGES.

CLOSE DOOR.

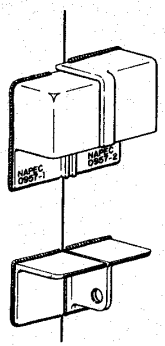

STEP 5

SECURITY HASP AND ATTACK SHIELD INSTALLED.

NOTES:

1. HIGH SECURITY HASP INSTALLATION HEIGHT IS INTENDED TO BE OPERATOR CONVENIENT. FOR STRUCTURES WITH A DOCK OR APRON GREATOR THAN TWO (2) INCHES BELOW THE BOTTOM OF THE DOOR, THE HEIGHT DIMENSION SPECIFIED SHOULD BE MEASURED FROM THE SURFACE OF THE DOCK OR APRON IN LIEU OF THE BOTTOM OF THE DOOR. (A)
2. USE WELDING ROD 310-16, 3/32 DIA.

LIST OF MATERIALS

GFM	ITEM	QTY	DESCRIPTION	NAVAL/COMML DESIG	
	2	1	BOTTOM ATTACK SHIELD	5532334	SHT 3
	3	1	CLASP	5532334	SHT 2
	4	1	COVER	5532334	SHT 2

(A)

STANDARD PLAN-INSTALLATION DETAIL FOR RIGHT HAND ACTIVE DOORS USING HIGH SECURITY HASP #0957

INSTALLATION PROCEDURES

DEPARTMENT OF THE NAVY
NAVAL SEA
SYSTEMS COMMAND
NAVAL AMMUNITION PRODUCTION ENGINEERING CENTER
CRANE, INDIANA

NAPEC DRAWING NO. 1297 SHEET OF

APPROVED 3-5-79
3/79
RROH 3-79
SCALE: SIZE F

REVISIONS				
ZONE	LTR	DESCRIPTION	DATE	APPROVAL
	A	SEE NOR 1298 A	3/6/79	

NOTICE: THE CONTENTS AND DESIGN DETAIL OF THIS DRAWING WERE DEVELOPED BY THE NAVAL ORDNANCE PROPERTY DISPOSAL CONTROL CENTER AND ARE OWNED BY THE NAVAL ORDNANCE PROPERTY DISPOSAL CONTROL CENTER.

NAPEC DRAWING NO. 1298 SHEET 1 OF 1

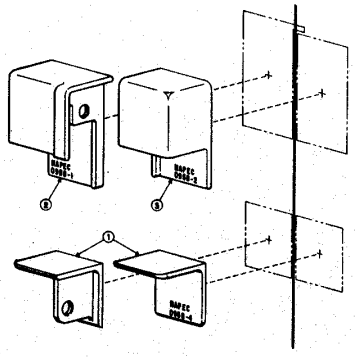

STEP 1

CUT AWAY 12-3/4 INCHES OF ASTRAGAL FROM MAGAZINE DOOR IF ASTRAGAL IS PRESENT.

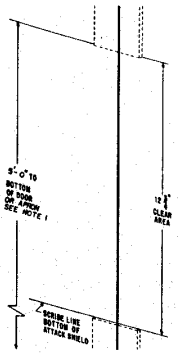

STEP 2

ASSEMBLE ASSEMBLY JIG AND BOTTOM ATTACK SHIELD AND POSITION AS SHOWN, WITH THE CENTER RIB OF THE JIG BETWEEN THE TWO DOORS AND THE LOWER EDGE OF THE ATTACK SHIELD ON THE SCRIBED LINE.

TACK WELD ATTACK SHIELD IN PLACE TO APPROPRIATE DOORS.

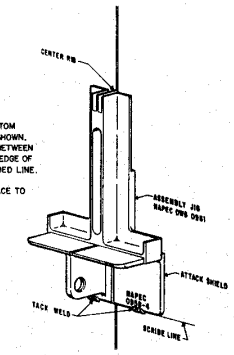

STEP 3

POSITION HASP SECTIONS IN ASSEMBLY JIG AS SHOWN AND TACK WELD IN PLACE.

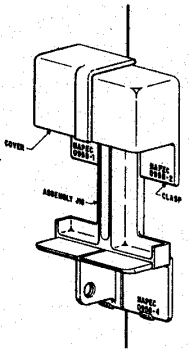

STEP 4

REMOVE ASSEMBLY JIG.

OPEN DOOR AND FINISH WELDING.

CAUTION

DO NOT WELD ON DOOR EDGES.

CLOSE DOOR.

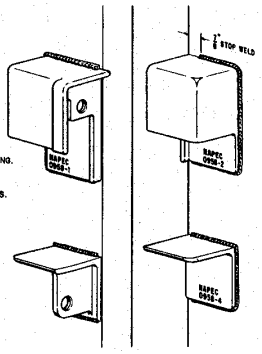

STEP 5

SECURITY HASP AND ATTACK SHIELD INSTALLED.

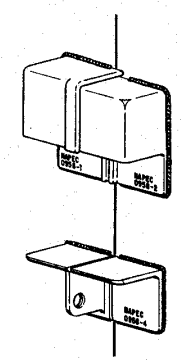

NOTES:

1. HIGH SECURITY HASP INSTALLATION HEIGHT IS INTENDED TO BE OPERATOR CONVENIENT. FOR STRUCTURES WITH A DOCK OR APRON GREATER THAN TWO (2) INCHES BELOW THE BOTTOM OF THE DOOR, THE HEIGHT DIMENSION SPECIFIED SHOULD BE MEASURED FROM THE SURFACE OF THE DOCK OR APRON IN LIEU OF THE BOTTOM OF THE DOOR. (A)
2. USE WELDING ROD 310-16, 3/32 DIA.

LIST OF MATERIALS

GFM	ITEM	QTY	DESCRIPTION	NAVAL/COMM'L DESIG	
	1	1	BOTTOM ATTACK SHIELD	5532335	SHT 3
	2	1	COVER	5532335	SHT 2
	3	1	CLASP	5532335	SHT 2

(A)

SYMBOLS: 1 ITEM; 1 WELD JOINT; 2 ITEM BALLOUT; 3 WELD JOINT BALLOUT

REMOVE BURRS & SHARP EDGES. DO NOT SCALE THIS DRAWING. UNLESS OTHERWISE SPECIFIED DIMENSIONS ARE IN INCHES.

SCALE: | SIZE F

APPROVED: 3-5-79

DRAWN: | DATE:

DESIGNED: | DATE:

CHECKED: | DATE: 3/79

APPROVED: RROH | DATE: 3-79

STANDARD PLAN– INSTALLATION DETAIL FOR LEFT HAND ACTIVE DOORS USING HIGH SECURITY HASP # 0958

INSTALLATION PROCEDURES

DEPARTMENT OF THE NAVY
NAVAL SEA
SYSTEMS COMMAND
NAVAL AMMUNITION PRODUCTION
ENGINEERING CENTER
CRANE, INDIANA

NAPEC DRAWING NO. 1298

SHEET 1 OF 1

NOTICE: THE CONTENTS AND DESIGN DETAIL OF THIS DRAWING WERE DEVELOPED BY THE NAVAL AMMUNITION PRODUCTION ENGINEERING CENTER AND ARE UNITED STATES GOVERNMENT PROPERTY.

NAPEC DRAWING NO. 1302 SHEET 1 OF 3

REVISIONS						
ZONE	LTR.	DESCRIPTION	DATE	APPROVAL		
C 7	A	1 STEP 2 REVISED. WAS DRILL JIG DWG 0964 2 3&4 SEE SHEET 3	10-79	AA	[illegible]	
E 5 F 3	B	ADDED NOTES 1&2 WAS SHEET 4	10-82	JF	[illegible]	
	C	SEE NOR 1302 C	[illegible]	[illegible]	[illegible]	

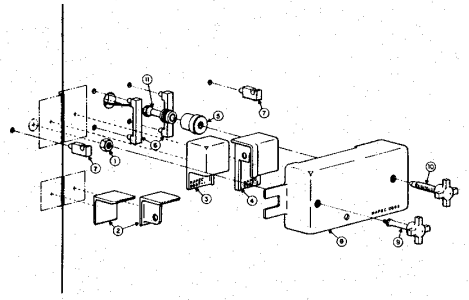

LIST OF MATERIALS

GFM	ITEM	QTY	DESCRIPTION	NAVAL/COMM'L DESIG	
	1	1	HOLD-DOWN NUT	5532336	SHT 3
	2	1	BOTTOM ATTACK SHIELD	5532334	SHT 3 (C)
	3	1	CLASP	5532334	SHT 2
	4	1	COVER	5532334	SHT 2
	5	1	JACK SCREW BUSHING (SENSOR BODY)	5532336	SHT 5 (B)
	6	2	A I B LUG	5532336	SHT 2
	7	2	A I B STAPLE	5532336	SHT 2
	8	1	A I B HOUSING	5532336	SHT 2
	9	1	BAR JACK SCREW, INACTIVE LEAF	5532336	SHT 3
	10	1	BAR JACK SCREW, ACTIVE LEAF	5532336	SHT 4
	11	1	SENSOR	5532336	SHT 5 (B)

NOTES:

1. HIGH SECURITY HASP INSTALLATION HEIGHT IS INTENDED TO BE OPERATOR CONVENIENT. FOR STRUCTURES WITH A DOCK OR APRON GREATER THAN TWO (2) INCHES BELOW THE BOTTOM OF THE DOOR, THE HEIGHT DIMENSION SPECIFIED SHOULD BE MEASURED FROM THE SURFACE OF THE DOCK OR APRON IN LIEU OF THE BOTTOM OF THE DOOR.
2. USE WELDING ROD 310-16, 3/32 DIA.

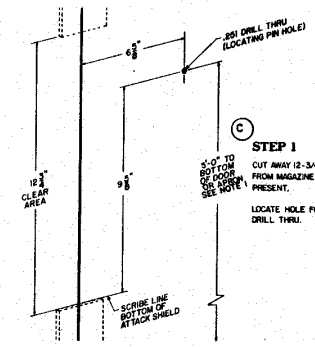

(C)

STEP 1

CUT AWAY 12-3/4 INCHES OF ASTRAGAL FROM MAGAZINE DOOR IF ASTRAGAL IS PRESENT.

LOCATE HOLE FOR LOCATING PIN AND DRILL THRU.

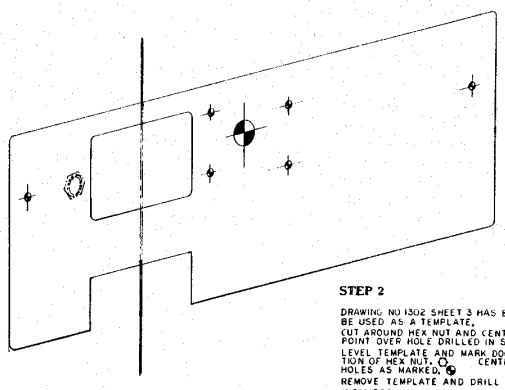

STEP 2

DRAWING NO 1302 SHEET 3 HAS BEEN MADE TO BE USED AS A TEMPLATE.
CUT AROUND HEX NUT AND CENTER LOCATOR POINT OVER HOLE DRILLED IN STEP ONE (1).
LEVEL TEMPLATE AND MARK DOOR FOR LOCATION OF HEX NUT. ○ CENTER PUNCH HOLES AS MARKED. ⊕
REMOVE TEMPLATE AND DRILL HOLES AS INDICATED.

(C)

C	-	B
1	2	3
REVISION	STATUS OF SHEETS	

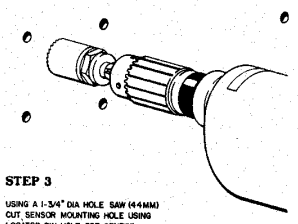

STEP 3

USING A 1-3/4" DIA HOLE SAW (44MM) CUT SENSOR MOUNTING HOLE USING LOCATOR PIN HOLE FOR CENTER.

FINISH WELD HOLD DOWN NUT TO DOOR.

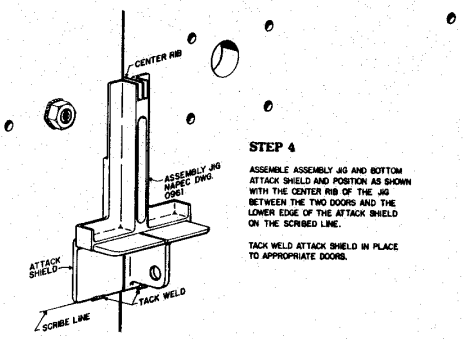

STEP 4

ASSEMBLE ASSEMBLY JIG AND BOTTOM ATTACK SHIELD AND POSITION AS SHOWN WITH THE CENTER RIB OF THE JIG BETWEEN THE TWO DOORS AND THE LOWER EDGE OF THE ATTACK SHIELD ON THE SCRIBED LINE.

TACK WELD ATTACK SHIELD IN PLACE TO APPROPRIATE DOORS.

APPROVED	3-5-79	STANDARD PLAN – ANTI-INTRUSION BAR INSTALLATION DETAIL FOR RIGHT HAND ACTIVE DOORS USING HIGH SECURITY HASP #0957	DEPARTMENT OF THE NAVY NAVAL SEA SYSTEMS COMMAND NAVAL AMMUNITION PRODUCTION ENGINEERING CENTER OMAHA, INDIANA
	3-79	INSTALLATION PROCEDURES	NAPEC DRAWING NO. 1302 SHEET 1 OF 3

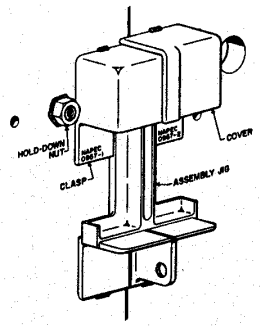

STEP 5

POSITION HASP SECTIONS IN ASSEMBLY JIG AS SHOWN AND TACK WELD IN PLACE.

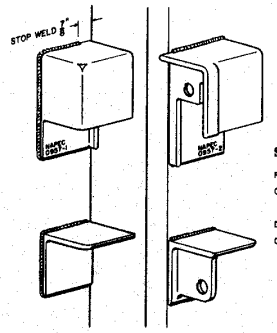

STEP 6

REMOVE ASSEMBLY JIG.

OPEN DOOR AND FINISH WELDING.

CAUTION

DO NOT WELD ON DOOR EDGES.

CLOSE DOOR.

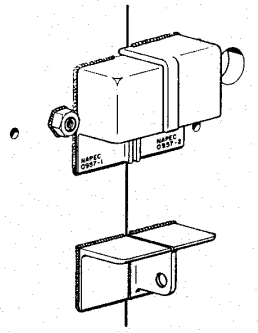

STEP 7

SECURITY HASP AND ATTACK SHIELD INSTALLED.

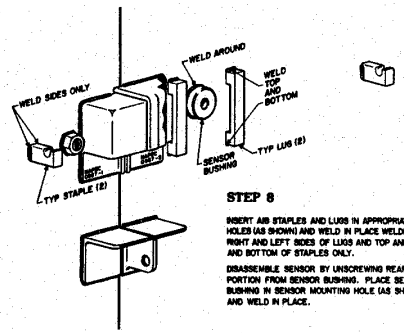

STEP 8

INSERT AIB STAPLES AND LUGS IN APPROPRIATE HOLES (AS SHOWN) AND WELD IN PLACE WELDING RIGHT AND LEFT SIDES OF LUGS AND TOP AND AND BOTTOM OF STAPLES ONLY.

DISASSEMBLE SENSOR BY UNSCREWING REAR PORTION FROM SENSOR BUSHING. PLACE SENSOR BUSHING IN SENSOR MOUNTING HOLE (AS SHOWN) AND WELD IN PLACE.

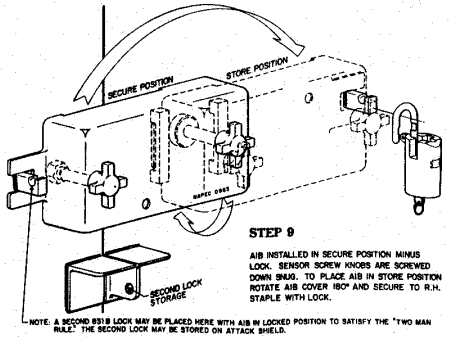

STEP 9

AIB INSTALLED IN SECURE POSITION MINUS LOCK. SENSOR SCREW KNOBS ARE SCREWED DOWN SNUG. TO PLACE AIB IN STORE POSITION ROTATE AIB COVER 180° AND SECURE TO R.H. STAPLE WITH LOCK.

NOTE: A SECOND 831B LOCK MAY BE PLACED HERE WITH AIB IN LOCKED POSITION TO SATISFY THE "TWO MAN RULE." THE SECOND LOCK MAY BE STORED ON ATTACK SHIELD.

APPROVED 3-5-79	STANDARD PLAN – ANTI-INTRUSION BAR INSTALLATION DETAIL FOR RIGHT HAND ACTIVE DOORS USING HIGH SECURITY HASP #0957	DEPARTMENT OF THE NAVY NAVAL SEA SYSTEMS COMMAND NAVAL AMMUNITION PRODUCTION ENGINEERING CENTER CRANE, INDIANA	
3/79			
RROH 3-79	INSTALLATION PROCEDURES	NAPEC DRAWING NO. 1302	
SCALE:	SIZE F	SHEET 2 OF 3	

NOTICE: THE CONTENTS AND DESIGN DETAILS OF THIS DRAWING WERE DEVELOPED BY THE NAVAL AMMUNITION PRODUCTION ENGINEERING CENTER AND ARE UNITED STATES GOVERNMENT PROPERTY.

NAPEC DRAWING NO. 1302 SHEET 2 OF 3

NOTICE: THE CONTENTS AND DESIGN DETAIL OF THIS DRAWING WERE DEVELOPED BY THE NAVAL AMMUNITION PRODUCTION ENGINEERING CENTER AND ARE UNDER SYSTEM CONTAINMENT REQUIRED.

NAPEC DRAWING NO. 1302
SHEET 3 OF 3

REVISIONS						
ZONE	LTR	DESCRIPTION	DATE	APPROVAL		
F 7	4	2. CUT LINES ADDED 3. LOCATING HOLES FOR 3/4 HEX NUT AND SLOTS FOR 3/8 Ø BASE SWIVEL PAD ADDED	10-79	AA		
E 2		4. 9/16 Ø WAS 500 Ø				
	B	SEE NOR 1302C				

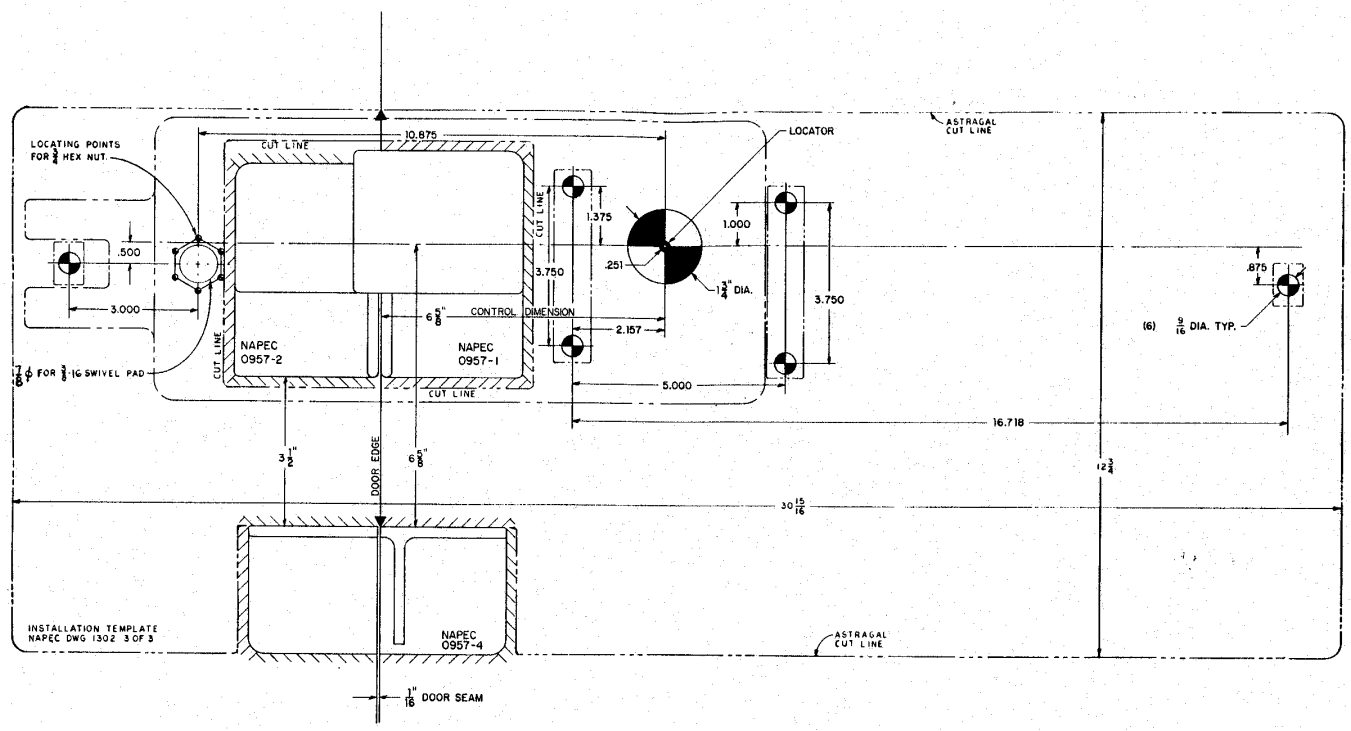

APPROVED 3-5-79	STANDARD PLAN – ANTI-INTRUSION BAR INSTALLATION DETAIL FOR RIGHT HAND ACTIVE DOORS USING HIGH SECURITY HASP # 0957	DEPARTMENT OF THE NAVY NAVAL SEA SYSTEMS COMMAND NAVAL AMMUNITION PRODUCTION ENGINEERING CENTER CRANE, INDIANA	
DRAWN 3/79		NAPEC DRAWING NO. 1302	
CHECKED EROH 3-79	HASP & AIB INSTALLATION TEMPLATE	SHEET 3 OF 3	
SCALE:	SIZE F		

NOTICE: [boilerplate]

REVISIONS					
ZONE	LTR	DESCRIPTION	DATE	APPROVED	
C 2	A	I STEP 2 REVISED. WAS DRILL JIG DWG 1093 2.344 SEE SHEET 3	10-79	AA	
E 5	B	ADDED NOTES 1&2	10-82	JF	
	C	SEE NOR 1305C	3-83		

NAPEC 1303 SHEET 3

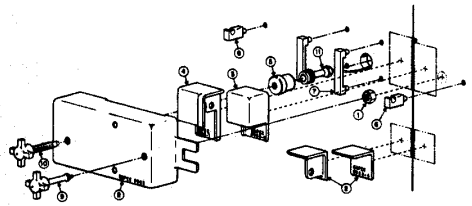

LIST OF MATERIALS

QTM	ITEM	QTY	DESCRIPTION	NAVAL/COMM'L DESIG	
	1	1	HOLD-DOWN NUT	5532336	SHT 3
	2	1	BOTTOM ATTACK SHIELD	5532335	SHT 5
	3	1	CLASP	5532335	SHT 2
	4	1	COVER	5532335	SHT 2
	5	1	JACK SCREW BUSHING (SENSOR BODY)	5532336	SHT 5
	6	2	A | B LUG	5532336	SHT 2
	7	2	A | B STAPLE	5532336	SHT 2
	8	1	A | B HOUSING	5532336	SHT 2
	9	1	BAR JACK SCREW, INACTIVE LEAF	5532336	SHT 3
	10	1	BAR JACK SCREW, ACTIVE LEAF	5532336	SHT 4
	11	1	SENSOR	5532336	SHT 5

(C)

NOTES:

1. HIGH SECURITY HASP INSTALLATION HEIGHT IS INTENDED TO BE OPERATOR CONVENIENT. FOR STRUCTURES WITH A DOCK OR APRON GREATER THAN TWO (2) INCHES BELOW THE BOTTOM OF THE DOOR, THE HEIGHT DIMENSION SPECIFIED SHOULD BE MEASURED FROM THE SURFACE OF THE DOCK OR APRON IN LIEU OF THE BOTTOM OF THE DOOR. (C)
2. USE WELDING ROD 310-16, 3/32 DIA.

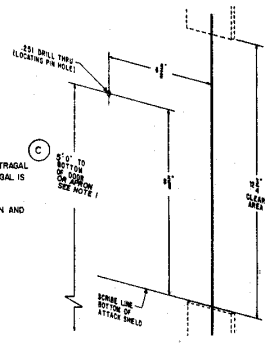

STEP 1

CUT AWAY 12-3/4 INCHES OF ASTRAGAL FROM MAGAZINE DOOR IF ASTRAGAL IS PRESENT.

LOCATE HOLE FOR LOCATING PIN AND DRILL THRU.

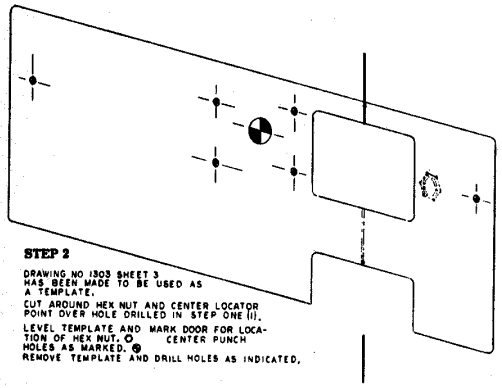

STEP 2

DRAWING NO 1303 SHEET 3 HAS BEEN MADE TO BE USED AS A TEMPLATE.

CUT AROUND HEX NUT AND CENTER LOCATOR POINT OVER HOLE DRILLED IN STEP ONE (1).

LEVEL TEMPLATE AND MARK DOOR FOR LOCATION OF HEX NUT. ⊙ CENTER PUNCH HOLES AS MARKED. ⊕
REMOVE TEMPLATE AND DRILL HOLES AS INDICATED.

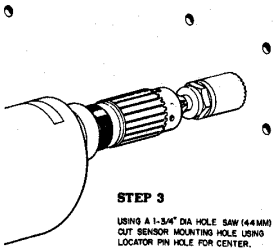

STEP 3

USING A 1-3/4" DIA HOLE SAW (44 MM) CUT SENSOR MOUNTING HOLE USING LOCATOR PIN HOLE FOR CENTER.

FINISH WELD HOLD-DOWN NUT TO DOOR.

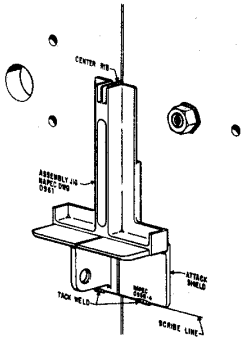

STEP 4

ASSEMBLE ASSEMBLY JIG AND BOTTOM ATTACK SHIELD AND POSITION AS SHOWN WITH THE CENTER RIB OF THE JIG BETWEEN THE TWO DOORS AND THE LOWER EDGE OF THE ATTACK SHIELD ON THE SCRIBED LINE.

TACK WELD ATTACK SHIELD IN PLACE TO APPROPRIATE DOORS.

C	-	B
	2	3
REVISION STATUS OF SHEETS		

(C)

SYMBOLS: ⊙ FOOD; ⊡ WELD ITEM; ⊕ PUSH AWAY; ⊞ PULL AWAY

APPROVED 3-5-79
DRAWN 3-79
CHECKED NAOH 3-79
SCALE F

STANDARD PLAN – ANTI-INTRUSION BAR INSTALLATION DETAIL FOR LEFT HAND ACTIVE DOORS USING HIGH SECURITY HASP #0958

INSTALLATION PROCEDURES

DEPARTMENT OF THE NAVY
NAVAL SEA SYSTEMS COMMAND
NAVAL AMMUNITION PRODUCTION ENGINEERING CENTER
CRANE, INDIANA

NAPEC DRAWING NO. 1303
SHEET 1 OF 3

NOTICE: THE CONTENTS AND DESIGN DETAIL OF THIS DRAWING WERE DEVELOPED BY THE NAVAL AMMUNITION PRODUCTION ENGINEERING CENTER AND ARE WHITE WATER ENTERPRISES PROPERTY.

NAPEC DRAWING NO. 1303 SHEET 2 OF 3

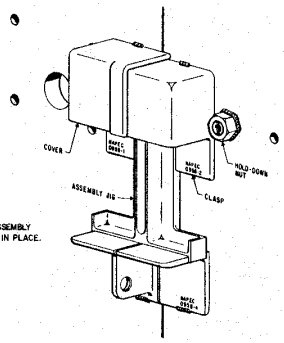

STEP 5

POSITION HASP SECTIONS IN ASSEMBLY JIG AS SHOWN AND TACK WELD IN PLACE.

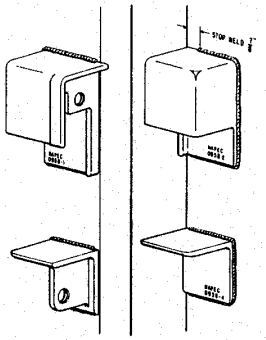

STEP 6

REMOVE ASSEMBLY JIG.

OPEN DOOR AND FINISH WELDING.

CAUTION

DO NOT WELD ON DOOR EDGES.

CLOSE DOOR.

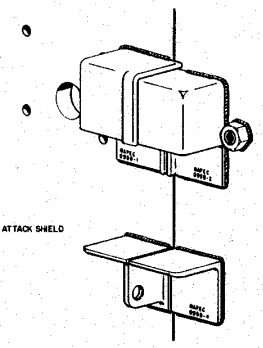

STEP 7

SECURITY HASP AND ATTACK SHIELD INSTALLED.

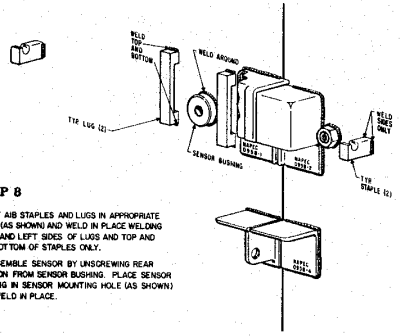

STEP 8

INSERT AIB STAPLES AND LUGS IN APPROPRIATE HOLES (AS SHOWN) AND WELD IN PLACE WELDING RIGHT AND LEFT SIDES OF LUGS AND TOP AND AND BOTTOM OF STAPLES ONLY.

DISASSEMBLE SENSOR BY UNSCREWING REAR PORTION FROM SENSOR BUSHING. PLACE SENSOR BUSHING IN SENSOR MOUNTING HOLE (AS SHOWN) AND WELD IN PLACE.

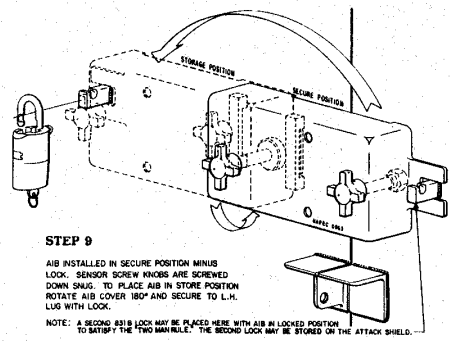

STEP 9

AIB INSTALLED IN SECURE POSITION MINUS LOCK. SENSOR SCREW KNOBS ARE SCREWED DOWN SNUG. TO PLACE AIB IN STORE POSITION ROTATE AIB COVER 180° AND SECURE TO L.H. LUG WITH LOCK.

NOTE: A SECOND 831B LOCK MAY BE PLACED HERE WITH AIB IN LOCKED POSITION TO SATISFY THE "TWO MAN RULE." THE SECOND LOCK MAY BE STORED ON THE ATTACK SHIELD.

APPROVED	3-19-79	STANDARD PLAN – ANTI-INTRUSION BAR INSTALLATION DETAIL FOR LEFT HAND ACTIVE DOORS USING HIGH SECURITY HASP #0958	DEPARTMENT OF THE NAVY NAVAL SEA SYSTEMS COMMAND NAVAL AMMUNITION PRODUCTION ENGINEERING CENTER CRANE, INDIANA
	3/79	INSTALLATION PROCEDURES	NAPEC DRAWING NO. 1303 SHEET 2 OF 3
	3-79		

ZONE	LTR.	REVISIONS DESCRIPTION	DATE	APPROVAL
E 2	A	1. CUT LINES ADDED 2. LOCATING HOLES FOR 3/4 HEX NUT AND SLOTS FOR 3/8 Ø BASE SWIVEL PAD ADDED	10-79	AA
E 7		3. 9/16 Ø WAS 33/64 Ø		
	B	SEE NOR 1303 B		

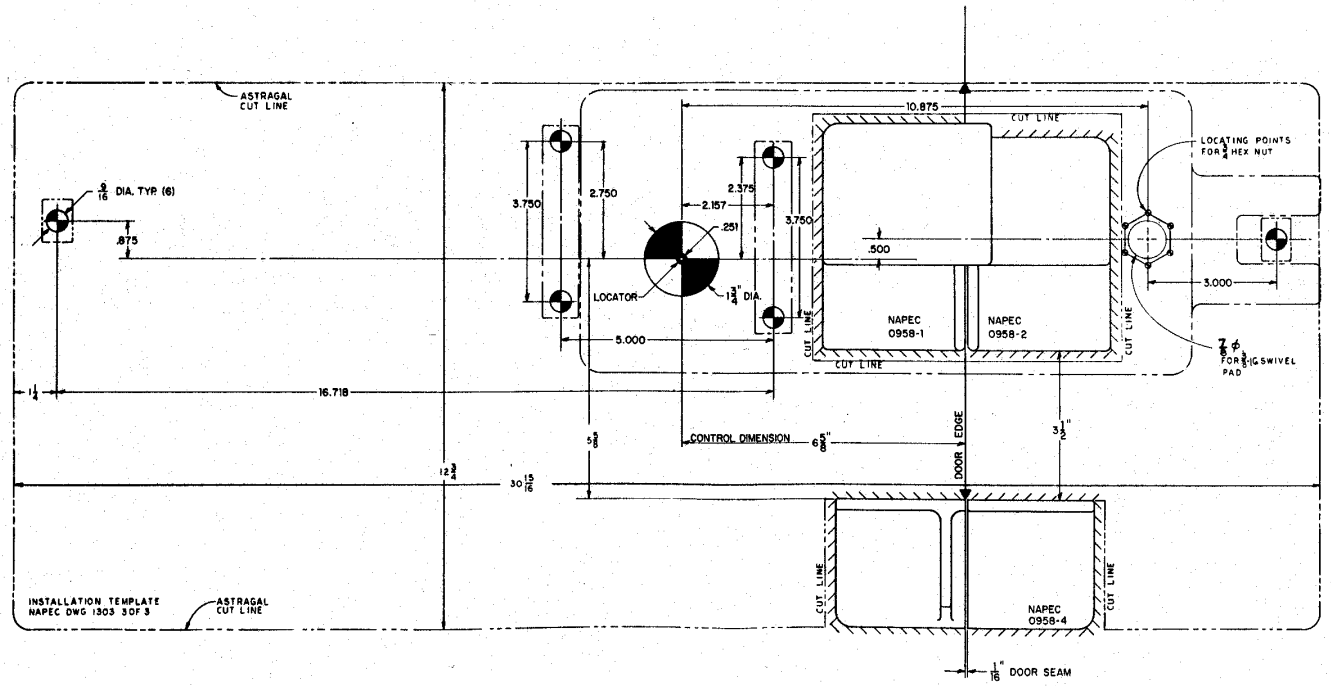

APPROVED 3-5-79	STANDARD PLAN – ANTI-INTRUSION BAR INSTALLATION DETAIL FOR LEFT HAND ACTIVE DOORS USING HIGH SECURITY HASP #0958	DEPARTMENT OF THE NAVY NAVAL SEA SYSTEMS COMMAND NAVAL AMMUNITION PRODUCTION ENGINEERING CENTER CRANE, INDIANA	
DRAWN 3-79	HASP & AIB INSTALLATION TEMPLATE	NAPEC DRAWING NO. 1303	
SCALE		SHEET 3 OF 3	

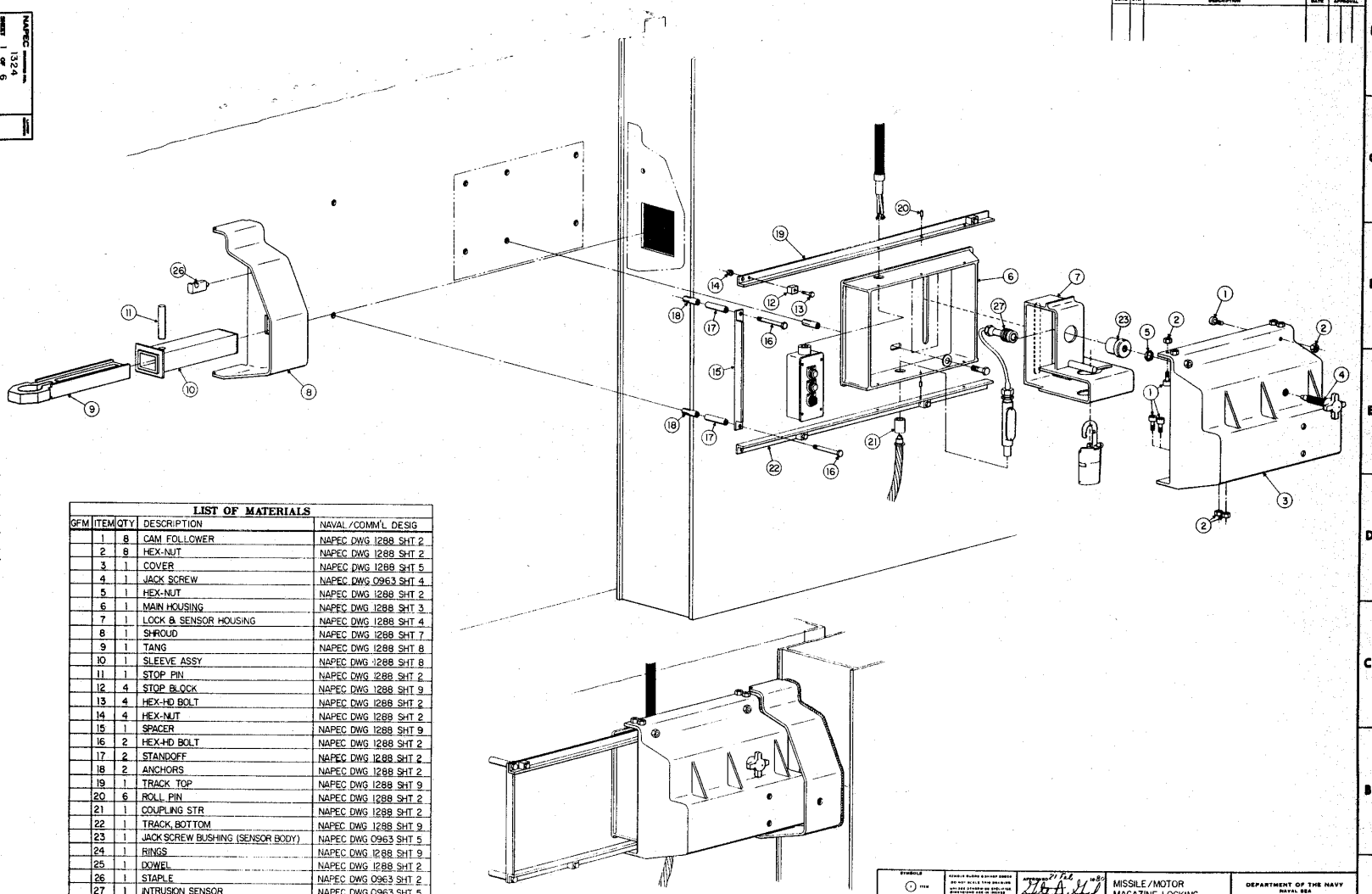

LIST OF MATERIALS

GFM	ITEM	QTY	DESCRIPTION	NAVAL/COMM'L DESIG
	1	8	CAM FOLLOWER	NAPEC DWG 1288 SHT 2
	2	8	HEX-NUT	NAPEC DWG 1288 SHT 2
	3	1	COVER	NAPEC DWG 1288 SHT 5
	4	1	JACK SCREW	NAPEC DWG 0963 SHT 4
	5	1	HEX-NUT	NAPEC DWG 1288 SHT 2
	6	1	MAIN HOUSING	NAPEC DWG 1288 SHT 3
	7	1	LOCK & SENSOR HOUSING	NAPEC DWG 1288 SHT 4
	8	1	SHROUD	NAPEC DWG 1288 SHT 7
	9	1	TANG	NAPEC DWG 1288 SHT 8
	10	1	SLEEVE ASSY	NAPEC DWG 1288 SHT 8
	11	1	STOP PIN	NAPEC DWG 1288 SHT 2
	12	4	STOP BLOCK	NAPEC DWG 1288 SHT 9
	13	4	HEX-HD BOLT	NAPEC DWG 1288 SHT 2
	14	4	HEX-NUT	NAPEC DWG 1288 SHT 2
	15	1	SPACER	NAPEC DWG 1288 SHT 9
	16	2	HEX-HD BOLT	NAPEC DWG 1288 SHT 2
	17	2	STANDOFF	NAPEC DWG 1288 SHT 2
	18	2	ANCHORS	NAPEC DWG 1288 SHT 2
	19	1	TRACK TOP	NAPEC DWG 1288 SHT 9
	20	6	ROLL PIN	NAPEC DWG 1288 SHT 2
	21	1	COUPLING STR	NAPEC DWG 1288 SHT 2
	22	1	TRACK, BOTTOM	NAPEC DWG 1288 SHT 9
	23	1	JACK SCREW BUSHING (SENSOR BODY)	NAPEC DWG 0963 SHT 5
	24	1	RINGS	NAPEC DWG 1288 SHT 9
	25	1	DOWEL	NAPEC DWG 1288 SHT 2
	26	1	STAPLE	NAPEC DWG 0963 SHT 2
	27	1	INTRUSION SENSOR	NAPEC DWG 0963 SHT 5

MISSILE/MOTOR MAGAZINE LOCKING SYSTEM
TRIDENT

GENERAL ASSEMBLY

DEPARTMENT OF THE NAVY
NAVAL SEA SYSTEMS COMMAND
NAVAL AMMUNITION PRODUCTION ENGINEERING CENTER
CRANE, INDIANA

NAPEC DRAWING NO 1324
SHEET 1 OF 6

NOTICE: THE CONCEPTS AND SPECIAL DETAILS OF THIS DRAWING ARE EXCLUSIVE TO THE NAVAL ORDNANCE STATION. INDIAN HEAD, MD. AND ARE NOT TO BE USED WITHOUT PERMISSION.

NAPEC 1324 SHEET 2 OF 6

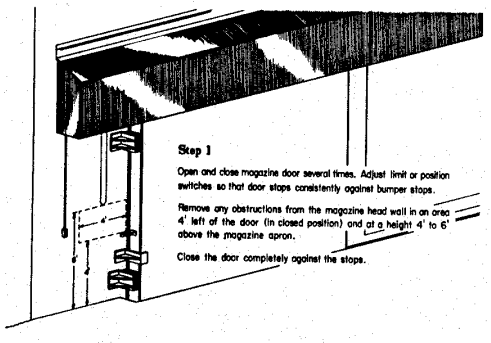

Step 1

Open and close magazine door several times. Adjust limit or position switches so that door stops consistently against bumper stops.

Remove any obstructions from the magazine head wall in an area 4' left of the door (in closed position) and at a height 4' to 6' above the magazine apron.

Close the door completely against the stops.

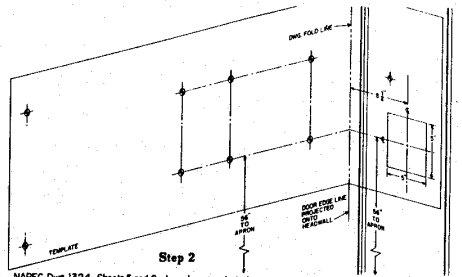

Step 2

NAPEC Dwg.1324, Sheets 5 and 6, have been made to be used as a composite template. Assemble the template sheets according to the instructions on the sheets. Place the composite template on the head wall and fold at the "Fold Line" in order that the end of the door may be marked for the lang cut-out. Mark the wall and door end as indicated. Remove the template and drill the concrete to receive anchors.

Drill hole in door end for staple only after installation of Piece 8 (see Step 7).

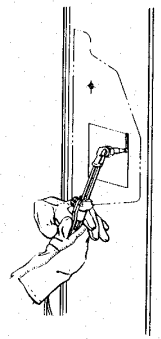

Step 3

Cut out 5" x 5" panel in end of door.

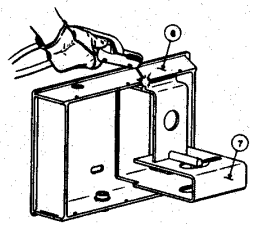

Step 4

Fit projection on back of lock and sensor housing, Piece 7, into groove of main housing, Piece 6. Weld assembled unit.

Step 5

Bolt the housing subassembly to the headwall using 1/2"-13 SAE bolts having a minimum tensile strength of 120 KSI. Use 1/2"-13 concrete anchors.

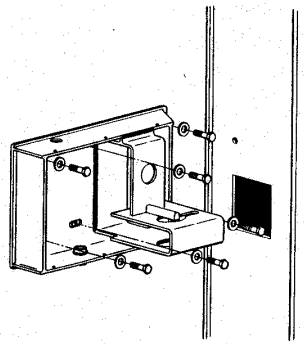

SYMBOLS			MISSILE/MOTOR MAGAZINE LOCKING SYSTEM TRIDENT	DEPARTMENT OF THE NAVY NAVAL SEA SYSTEMS COMMAND NAVAL AMMUNITION PRODUCTION ENGINEERING CENTER CRANE, INDIANA
		SCALE F	GENERAL ASSEMBLY	NAPEC DRAWING NO. 1324 SHEET 2 OF 6

NOTICE: THE DRAWING AND DESIGN DETAIL OF THIS DEVICE WERE DEVELOPED AT THE NAVAL AMMUNITION PRODUCTION ENGINEERING CENTER AND ARE UNITED STATES GOVERNMENT PROPERTY.

NAPEC DRAWING NO. 1324 SHEET 3 OF 6

REVISIONS					
ZONE	LTR	DESCRIPTION	DATE	D	C	B
				APPROVAL		

Step 6

Assemble cover tracks, Pieces 15, 16, 17, 19, 20 and 22 to housing assembly and headwall.

Weld tracks to main housing, Piece 6.

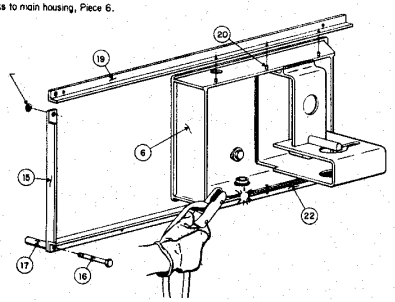

Step 7

Insert sleeve assy. Piece 10, through hole in shroud, Piece 8, and weld in place.
Insert tang, Piece 9, into sleeve assembly, Piece 10.
Install stop pin, Piece 11, through sleeve assembly, Piece 10, and tang, Piece 9. Weld stop pin in place.
Install and weld staple, Piece 26, to shroud, Piece 8. Drill relief hole in door end since Piece 26 length exceeds thickness of Piece 8.

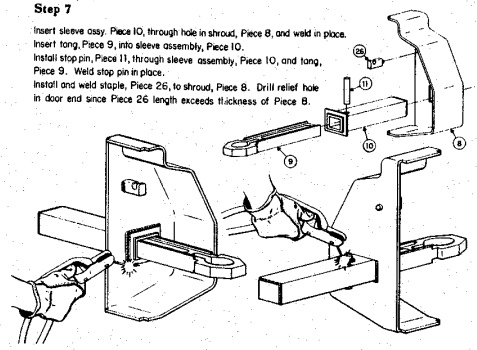

Step 8

An installation jig (NAPEC Dwg. 1288, Sheet 10) is available to align the lock hole of the lock and sensor housing, Piece 7, with the sliding tang and shroud assembly fabricated in Step 7.
Insert shroud assembly into door end hole cut in Step 3. Close door and slide tang into lock housing.
Wedge lower half of installation jig under tang and between tang and lock housing. Insert upper half of installation jig through hole and tang. Adjust shroud position on door end until entire jig, tang, lock housing configuration is stable.

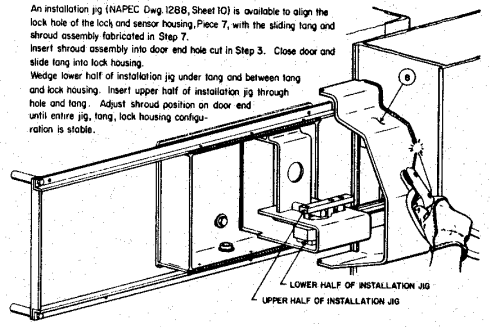

Weld shroud assembly, Piece 8, to door end with continuous weld.
Remove jig parts from around tang and lock housing assembly.

Step 9

Cover, Piece 3, comes with cam followers, Piece 1, (8) installed. Slide cover onto upper and lower track systems and install stop blocks, Piece 12 (4) at ends of track.

Partially thread jackscrew, Piece 4, into cover, Piece 3.

Install locking hex nut, Piece 5, onto jackscrew to prevent inadvertent removal of jackscrew.

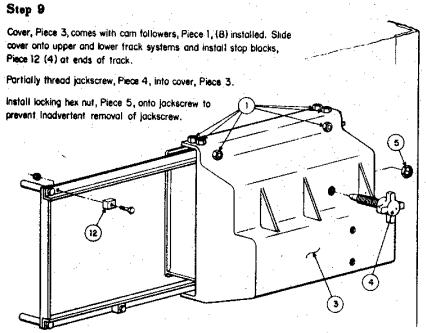

Step 10

Slide cover to the left exposing lock and sensor housing.

Insert sensor body, Piece 23, into the sensor hole. Do not weld until sensor body is in aligned with jackscrew.

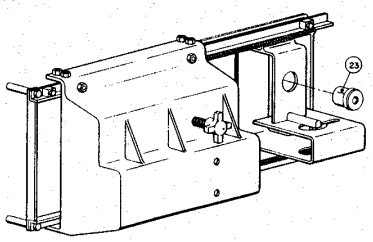

SYMBOLS		MISSILE/MOTOR MAGAZINE LOCKING SYSTEM TRIDENT	DEPARTMENT OF THE NAVY NAVAL SEA SYSTEMS COMMAND NAVAL AMMUNITION PRODUCTION ENGINEERING CENTER CRANE, INDIANA
SIZE F	SCALE	GENERAL ASSEMBLY	NAPEC DRAWING NO. 1324 SHEET 3 OF 6

NOTICE: THE DRAWINGS AND DESIGNS DETAILED ON THIS DRAWING WERE DEVELOPED BY THE NAVAL ORDNANCE PRODUCTION ENGINEERING GROUP AND ARE UNITED STATES GOVERNMENT PROPERTY.

REVISIONS

ZONE	LTR	DESCRIPTION	DATE	APPROVAL

NAPEC 1324 SHEET 4 OF 6

Step 11

Slide cover to the right.

Rotate jackscrew, Piece 4, until the tapered tip is fully seated in the sensor body. If misalignment exists, (1) back jackscrew out, (2) slide cover to open position, (3) remove sensor body, (4) enlarge sensor hole in housing, and (5) repeat previous steps.

Tack weld sensor body to housing.

Back jackscrew out and slide cover to the left. Finish welding sensor body to housing.

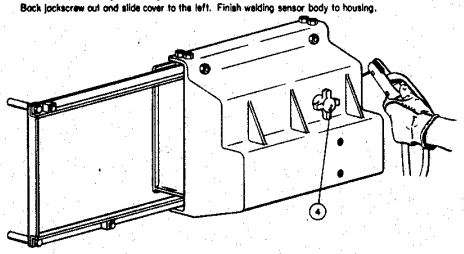

Step 12

Install intrusion sensor, Piece 27, in sensor body, Piece 23.

Install supporting sensor wiring.

NOTE: COVER NOT SHOWN IN THIS ILLUSTRATION FOR CLARITY

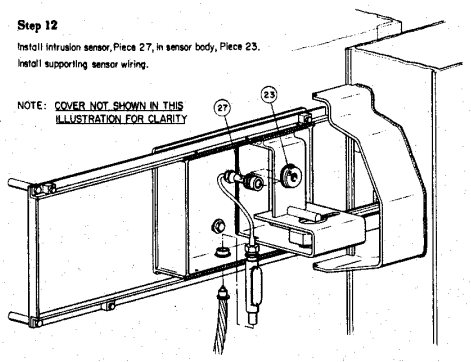

Step 13

Install door controls and supporting electrical equipment.

NOTE: COVER REMOVED IN THIS ILLUSTRATION FOR CLARITY

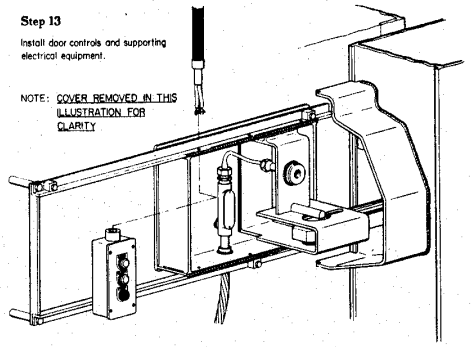

Step 14

The locking method used in the Trident hasp consists of a Sargent and Greenleaf, Model 8318, lock body used in a shear condition between the tang and the lock and sensor housing.

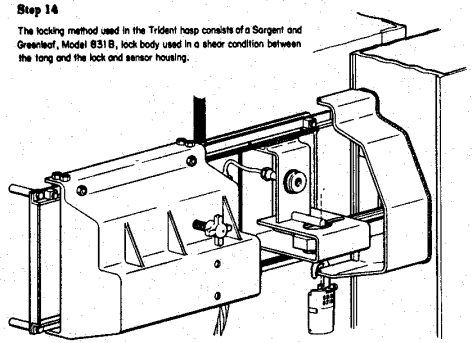

Step 15

Install reflective green tape on tang, Piece 9, as shown to allow for physical check of locked condition.

Drill a 3/4" diameter hole in shroud, Piece 8, as shown to facilitate viewing of tape when cover is closed and sensor deactivated.

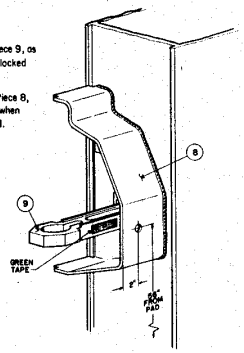

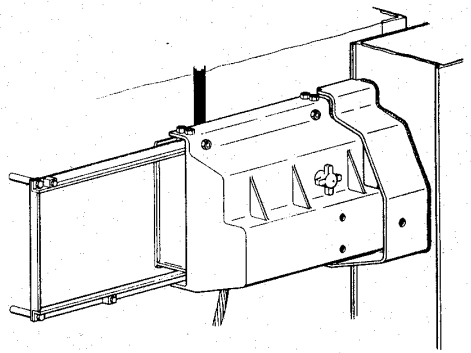

			MISSILE/MOTOR MAGAZINE LOCKING SYSTEM TRIDENT	DEPARTMENT OF THE NAVY NAVAL SEA SYSTEMS COMMAND NAVAL AMMUNITION PRODUCTION ENGINEERING CENTER CRANE, INDIANA
			GENERAL ASSEMBLY	NAPEC DRAWING NO. 1324 SHEET 4 OF 6

NOTICE: THE CONTENTS AND DESIGN DETAILS OF THIS DRAWING WERE DEVELOPED BY THE NAVAL AMMUNITION PRODUCTION ENGINEERING CENTER AND ARE UNITED STATES GOVERNMENT PROPERTY.

NAPEC DRAWING NO. 1324
SHEET 5 OF 6

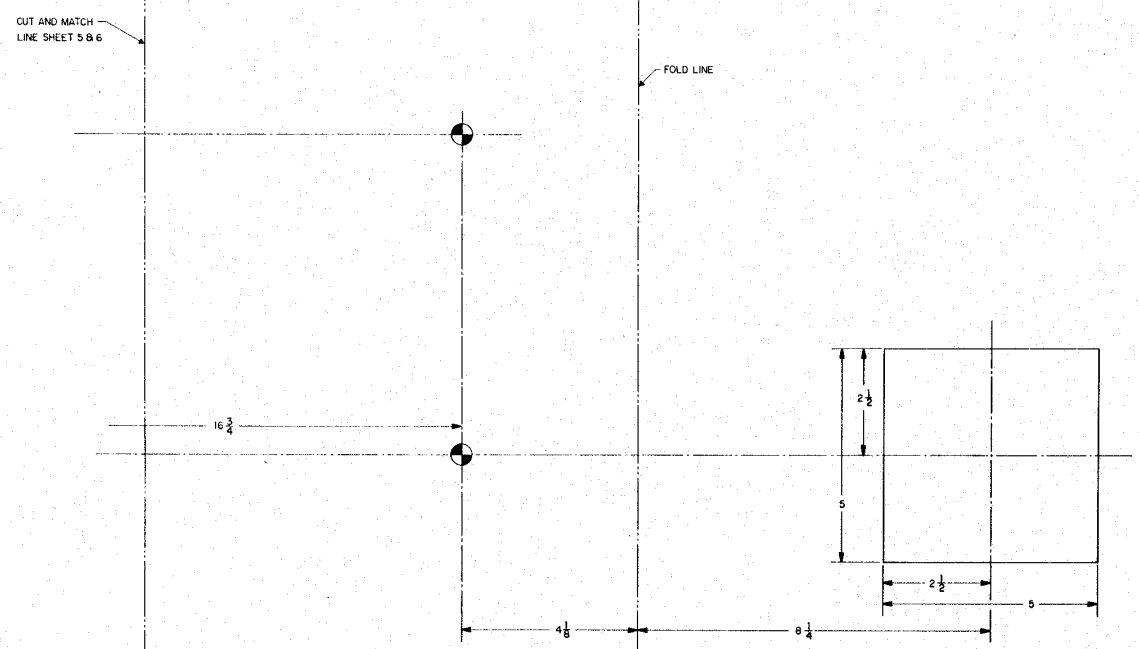

REVISIONS					
ZONE	LTR	DESCRIPTION	DATE	APPROVAL	

COMPOSITE LAYOUT OF MOUNTING HOLES

TRIDENT
HIGH SECURITY
HASP HARDWARE

DEPARTMENT OF THE NAVY
NAVAL SEA
SYSTEMS COMMAND
NAVAL AMMUNITION PRODUCTION
ENGINEERING CENTER
CRANE, INDIANA

NAPEC DRAWING NO. 1324
SHEET 5 OF 6

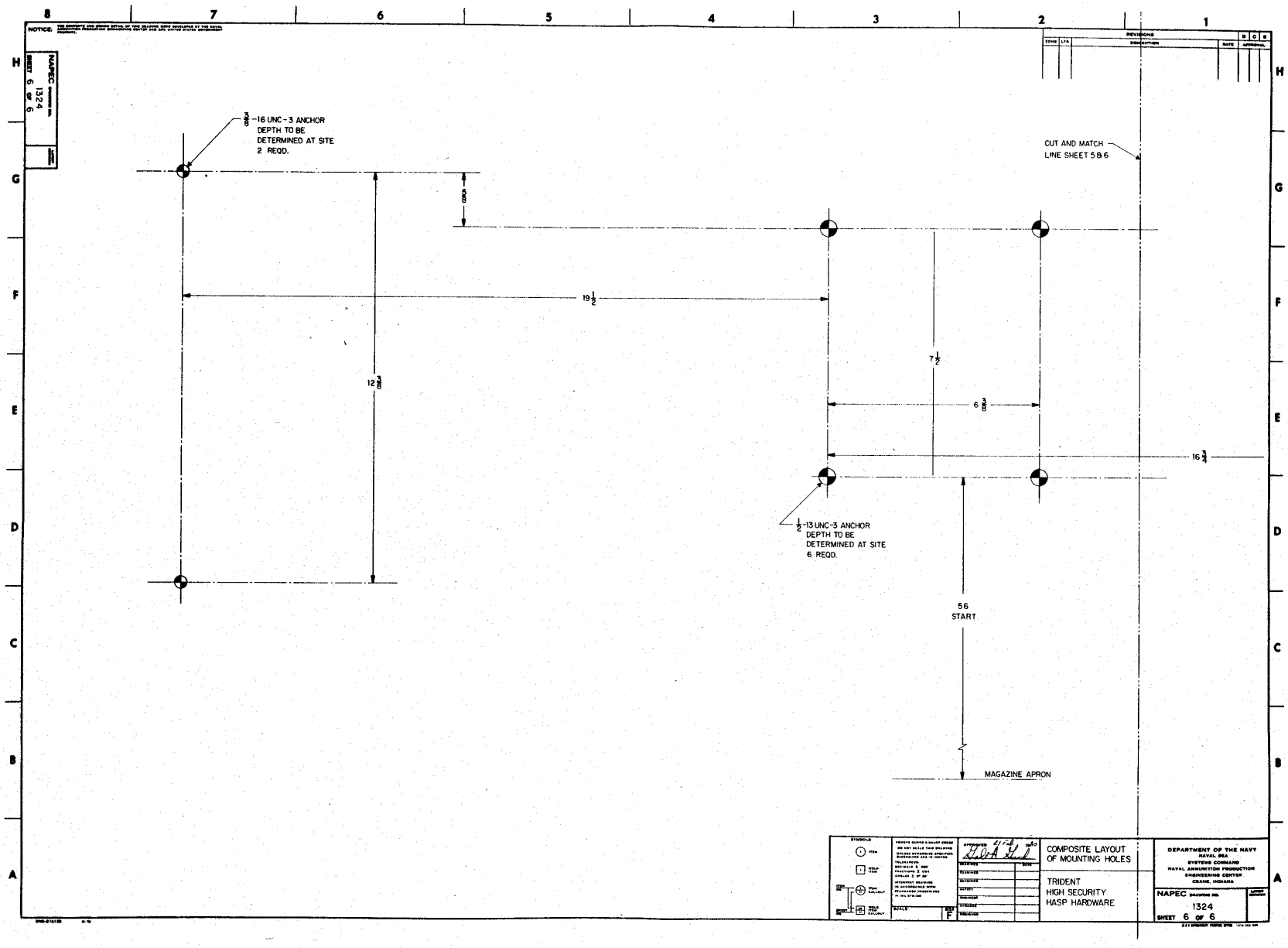

NOTICE:
NAPEC DRAWING NO. 1324
SHEET 6 OF 6
REVISIONS
ZONE
LTR
DESCRIPTION
DATE
APPROVAL
3/8-16 UNC-3 ANCHOR DEPTH TO BE DETERMINED AT SITE 2 REQD.
CUT AND MATCH LINE SHEET 5 & 6
19 1/2
12 3/8
7 1/2
6 3/8
16 3/4
1/2-13 UNC-3 ANCHOR DEPTH TO BE DETERMINED AT SITE 6 REQD.
56 START
MAGAZINE APRON
SYMBOLS
COMPOSITE LAYOUT OF MOUNTING HOLES
TRIDENT HIGH SECURITY HASP HARDWARE
DEPARTMENT OF THE NAVY
NAVAL SEA SYSTEMS COMMAND
NAVAL AMMUNITION PRODUCTION ENGINEERING CENTER
CRANE, INDIANA
NAPEC DRAWING NO. 1324
SHEET 6 OF 6
SIZE F

NOTICE: THE CONTENTS AND DESIGN DETAIL OF THE DRAWING WERE DEVELOPED BY THE NAVAL AMMUNITION PRODUCTION ENGINEERING CENTER AND ARE UNITED STATES GOVERNMENT PROPERTY

NAPEC DRAWING NO. 1382
SHEET 1 OF 2

NOTES
1. INTERPRET DRAWING IN ACCORDANCE WITH MIL-STD-100.
2. REMOVE BURRS AND SHARP EDGES

REVISIONS				D	C	S
ZONE	LTR	DESCRIPTION	DATE	APPROVAL		
	A	SEE NOR 1382 A				

NOTE: INSTALLATION OF LOCK ANTI-ROTATION BLOCKS ALLOWS NAPEC 0957 & 0958 SECURITY HASP SYSTEM TO BE CERTIFIED HIGH SECURITY WITH S & G 826C LOCK.

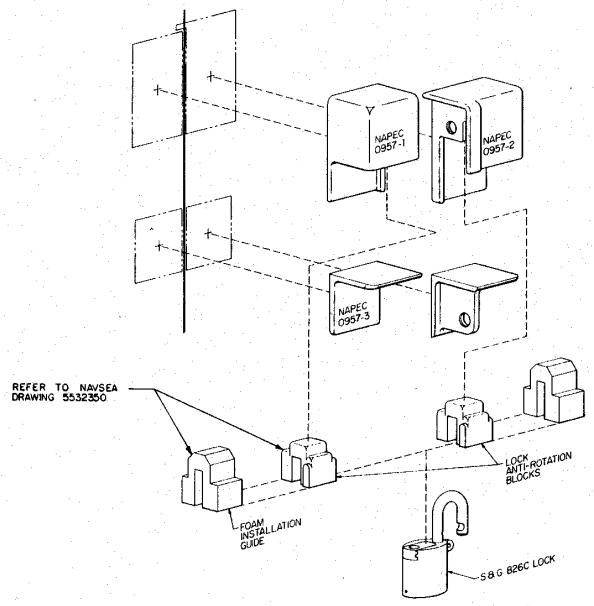

LOCK ANTI-ROTATION BLOCKS INSTALLED IN 0957 HASP

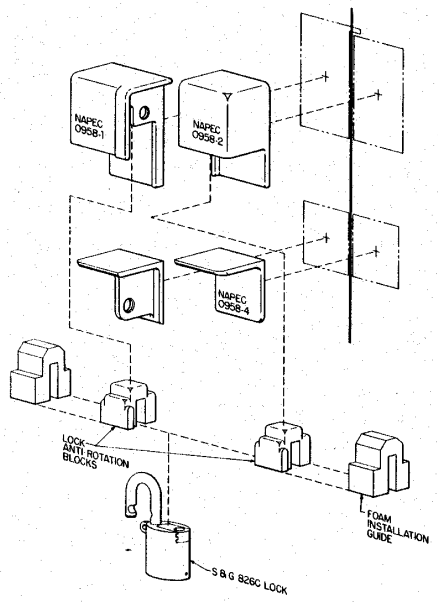

LOCK ANTI ROTATION BLOCKS INSTALLED IN 0958 HASP

FIND NO.	QTY REQ	CODE IDENT	PART, DRAWING OR SPEC NO.	NOMENCLATURE/DESCRIPTION	REMARKS

PARTS LIST

NEXT ASSY	USED ON	DO NOT SCALE DRAWING		INITIALS	DATE
APPLICATION		UNLESS OTHERWISE SPECIFIED DIMENSIONS ARE IN INCHES	EXAMINED		
		TOLERANCES	EXAMINED		
		XX DECIMALS ±	SAFETY		
		XXX DECIMALS ±	ENGINEER		
		FRACTIONS ±	CHECKED		
		ANGLES ±	DESIGNED		
		SCALE	APPROVED		

NAVAL AMMUNITION PRODUCTION ENGINEERING CENTER CRANE, IN 47522

DEPARTMENT OF THE NAVY NAVAL SEA SYSTEMS COMMAND WASHINGTON, DC 20362

INSTALLATION INSTRUCTIONS FOR LOCK ANTI-ROTATION BLOCKS USING NAPEC HASPS 0957 & 0958

SIZE	CODE IDENT NO.	NAVAMPROENGCEN DWG NO
F	53711	NAPEC 1382

SHEET 1 OF 2

NOTICE: THE CONTENTS AND DESIGN DETAIL OF THIS DRAWING WERE DEVELOPED BY THE NAVAL AMMUNITION PRODUCTION ENGINEERING CENTER AND ARE UNITED STATES GOVERNMENT PROPERTY.

NAPEC 1382 SHEET 2 OF 2

NOTES

1. INTERPRET DRAWING IN ACCORDANCE WITH MIL-STD-100.
2. REMOVE BURRS AND SHARP EDGES

REVISIONS				
ZONE	LTR	DESCRIPTION	DATE	D C B APPROVAL

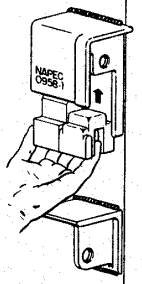

STEP 1

GENERAL:

THE LOCK ANTI-ROTATION BLOCKS HAVE BEEN DESIGNED TO PREVENT THE MEDIUM SECURITY S&G 826C LOCK FROM ROTATING IN THE NAVY'S HIGH SECURITY HASP SYSTEM. THUS IT ACTS AND CAN BE CERTIFIED AS A HIGH SECURITY SYSTEM. HOWEVER, THE EXISTANCE OF SHORT SHACKLED S & G 826C LOCKS MAKES IT NECESSARY TO ADJUST THE FIT OF THE ANTI-ROTATION BLOCKS BEFORE WELDING TO THE HASP.

A. OPEN DOORS AND INSERT ONE ANTI-ROTATION BLOCK AND ITS FOAM GUIDE INTO THE LEFT-HAND HASP UNIT AS SHOWN.

B. INSERT ANOTHER ANTI-ROTATION BLOCK AND ITS FOAM GUIDE INTO THE RIGHT-HAND HASP IN THE SAME MANNER.

(THE FOAM GUIDES ARE DESIGNED TO HOLD THE BLOCKS IN PLACE TO DETERMINE THE FIT.)

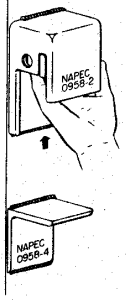

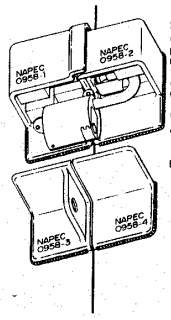

STEP 2

GENERAL:

EACH ANTI-ROTATION BLOCK MUST BE INSERTED UNTIL THE PROTRUDING EAR FITS COMPLETELY IN THE SLOTS OF THE HASP. THE LOCK MAY THEN BE INSTALLED TO CHECK THE FIT.

A. CLOSE DOORS AND INSERT S&G 826C LOCK THROUGH HASP.

B. LOCK THE LOCK AND REMOVE THE KEY.

(1) IF IT LOCKS EASILY, GO ON TO STEP 4.

(2) IF THE LOCK WILL NOT LOCK, IT MAY BE CAUSED BY TOO TIGHT A FIT BETWEEN THE ANTI-ROTATION BLOCKS AND THE LOCK. REMOVE THE LOCK, FOAM GUIDES AND ANTI-ROTATION BLOCKS AND GO TO STEP 3.

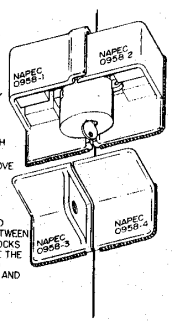

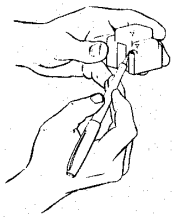

STEP 3

GENERAL:

A BETTER FIT MAY BE OBTAINED BY GRINDING AWAY A PORTION OF THE EAR WHICH FITS IN THE HASP SLOT. REMOVAL OF 1/16 INCH WILL GENERALLY BE SUFFICIENT TO ALLOW THE LOCK TO CLOSE BUT NOT ENOUGH TO DEFEAT THE PURPOSE OF THE BLOCKS. AFTER GRINDING, REPEAT STEPS 1 & 2.

STEP 4

GENERAL:

THE LOCK ANTI-ROTATION BLOCKS DO NOT HAVE TO BE FULL WELDED TO THE HASP TO PROVIDE SECURITY. ALSO, THE BLOCKS MUST BE REMOVED IF THE S&G 8318 LOCK IS TO BE USED.

A. TACK WELD ANTI-ROTATION BLOCKS TO THEIR RESPECTIVE HASP HALVES AS SHOWN. (TACK WELD ONLY)!!

B. USE 308-15 OR 308-16 WELDING ROD FOR BEST RESULTS.

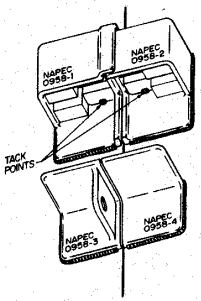

STEP 5

REMOVE FOAM INSTALLATION GUIDES AND DISCARD.

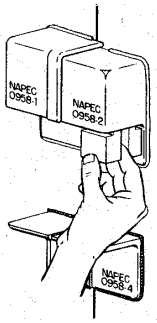

FIND NO.	QTY REQ	CODE IDENT.	PART, DRAWING OR SPEC NO.	NOMENCLATURE/DESCRIPTION	REMARKS

PARTS LIST

NEXT ASSY | USED ON

APPLICATION

SYMBOLS: ITEM; WELD ITEM; ITEM CALLOUT; WELD ITEM CALLOUT

DO NOT SCALE DRAWING

UNLESS OTHERWISE SPECIFIED, DIMENSIONS ARE IN INCHES

TOLERANCES

X DECIMALS ±

XXX DECIMALS ±

FRACTIONS ±

ANGLES ±

SCALE

	INITIALS	DATE
EXAMINED		
EXAMINED		
SAFETY		
ENGINEER		
CHECKED		
PROJECT OFFICER		

APPROVED DATE 5 1982

NAVAL AMMUNITION PRODUCTION ENGINEERING CENTER, CRANE, IN 47522

DEPARTMENT OF THE NAVY, NAVAL SEA SYSTEMS COMMAND, WASHINGTON, DC 20362

INSTALLATION INSTRUCTIONS FOR LOCK ANTI ROTATION BLOCKS USING NAPEC HASPS 0957 & 0958

SIZE	CODE IDENT NO.	NAVAMPROENGCEN DWG NO.
F	53711	NAPEC 1382

SHEET 2 OF 2

NOTICE: THE CONTENTS AND DESIGN DETAIL OF THIS DRAWING WERE DEVELOPED BY THE NAVAL AMMUNITION PRODUCTION ENGINEERING CENTER AND ARE UNITED STATES GOVERNMENT PROPERTY.

NAPEC 1403 SHEET 1 OF 1

NOTES

1. INTERPRET DRAWING IN ACCORDANCE WITH MIL-STD-100.
2. REMOVE BURRS AND SHARP EDGES
3. HIGH SECURITY HASP INSTALLATION HEIGHT IS INTENDED TO BE OPERATOR CONVENIENT FOR STRUCTURES WITH A DOCK OR APRON GREATER THAN TWO (2) INCHES BELOW THE BOTTOM OF THE DOOR. THE HEIGHT DIMENSION SPECIFIED SHOULD BE MEASURED FROM THE SURFACE OF THE DOCK OR APRON IN LIEU OF THE BOTTOM OF THE DOOR. (A)

INSTALLATION INSTRUCTIONS

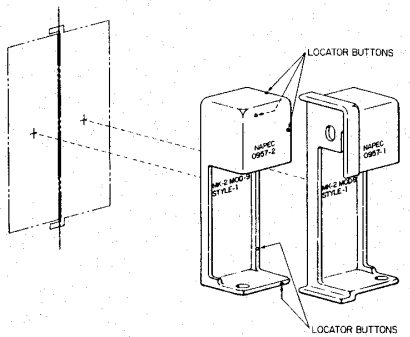

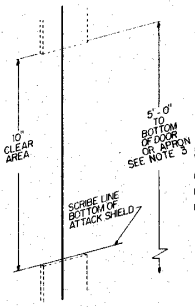

STEP 1

CUT AWAY 10 INCHES OF ASTRAGAL FROM MAGAZINE DOOR IF ASTRAGAL IS PRESENT.

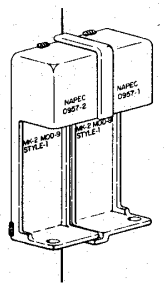

STEP 2

NOTE: LOCATOR BUTTONS HAVE BEEN CAST ONTO THE HASP TO AID INSTALLATION. POSITION HASP ON DOORS USING THE BUTTONS TO ESTABLISH CLEARANCE. TACK WELD HASP ONTO DOORS.

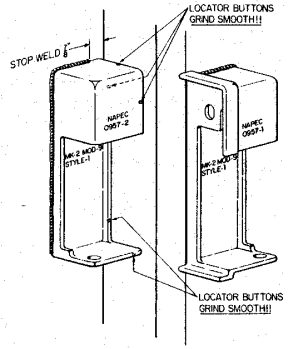

STEP 3

OPEN DOOR AND FINISH WELDING.*

CAUTION

DO NOT WELD ON DOOR EDGES. GRIND OFF LOCATOR BUTTONS!! CLOSE DOORS.

*NOTE: USE WELDING ELECTRODE 310-15 OR 310-16, 3/32 DIA. (A)

REVISIONS					D	C	S
ZONE	LTR	DESCRIPTION	DATE	APPROVAL			
	A	SEE NOR 1403 A	7/15				

APPLICATIONS

RIGHT HAND DOOR OPENING FIRST WITHOUT ASTRACAL

RIGHT HAND DOOR OPENING FIRST WITH ASTRACAL

SINGLE DOOR HINGED RIGHT SWINGING OUT

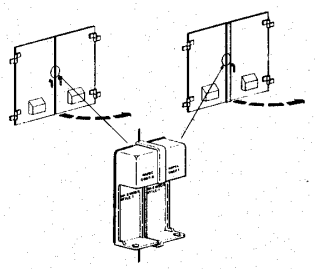

DOUBLE SLIDING DOORS ON INSIDE OR OUTSIDE OF JAMB

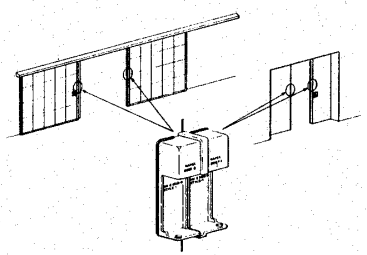

SLIDING DOORS MOVING RIGHT TO OPEN WITH DOOR ON OUTSIDE OF JAMB

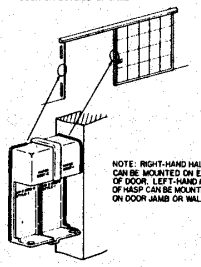

NOTE: RIGHT-HAND HALF CAN BE MOUNTED ON END OF DOOR. LEFT-HAND HALF OF HASP CAN BE MOUNTED ON DOOR JAMB OR WALL.

SINGLE DOOR HINGED LEFT OPENING IN

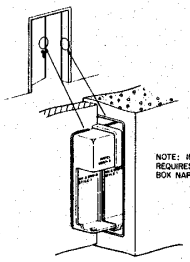

NOTE: INSTALLATION REQUIRES WALL MOUNTING BOX NAPEC 1286

SLIDING DOOR MOVING RIGHT TO OPEN WITH DOOR ON INSIDE OF JAMB

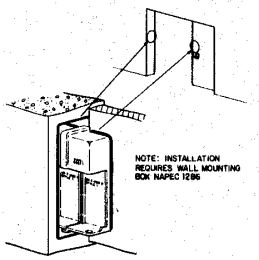

NOTE: INSTALLATION REQUIRES WALL MOUNTING BOX NAPEC 1286

FIND NO.	QTY REQ	CODE IDENT	PART, DRAWING OR SPEC NO.	NOMENCLATURE/DESCRIPTION	REMARKS

PARTS LIST

NEXT ASSY	USED ON
APPLICATION	

SYMBOLS: (1) ITEM; (2) WELD ITEM; ITEM NO. / ITEM CALLOUT; BASIC NO. / WELD ITEM CALLOUT

DO NOT SCALE DRAWING

UNLESS OTHERWISE SPECIFIED DIMENSIONS ARE IN INCHES.

TOLERANCES
XX DECIMALS ±
XXX DECIMALS ±
FRACTIONS ±
ANGLES °

SCALE

	INITIALS	DATE
EXAMINED		
EXAMINED		
SAFETY		
ENGINEER		
CHECKED		
DESIGNED		
APPROVED 2 Aug 82		

NAVAL AMMUNITION PRODUCTION ENGINEERING CENTER, CRANE, IN 47522

DEPARTMENT OF THE NAVY, NAVAL SEA SYSTEMS COMMAND, WASHINGTON, DC 20362

HIGH SECURITY HASP APPLICATION AND INSTALLATION INSTRUCTIONS FOR MK 2 MOD 9 STYLE 1

SIZE	CODE IDENT NO	NAVAMPROENGCEN DWG NO.
F	53711	1403

SHEET OF

NOTICE: THE CONCEPTS AND DESIGN DETAIL OF THIS DRAWING WERE DEVELOPED BY THE NAVAL AMMUNITION PRODUCTION ENGINEERING CENTER AND ARE UNITED STATES GOVERNMENT PROPERTY.

SHEET 1 OF 1 — NAPEC 1404

NOTES

1. INTERPRET DRAWING IN ACCORDANCE WITH MIL STD-100.
2. REMOVE BURRS AND SHARP EDGES.
3. HIGH SECURITY HASP INSTALLATION HEIGHT IS INTENDED TO BE OPERATOR CONVENIENT FOR STRUCTURES WITH A DOCK OR APRON GREATER THAN TWO (2) INCHES BELOW THE BOTTOM OF THE DOOR. THE HEIGHT DIMENSION SPECIFIED SHOULD BE MEASURED FROM THE SURFACE OF THE DOCK OR APRON IN LIEU OF THE BOTTOM OF THE DOOR. (A)

INSTALLATION INSTRUCTIONS

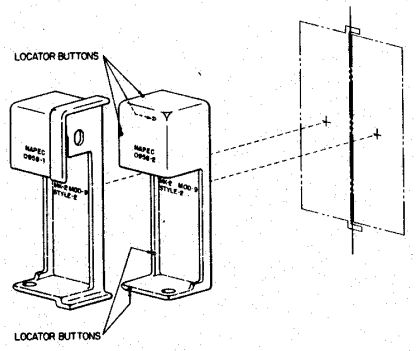

STEP 1

CUT AWAY 10 INCHES OF ASTRAGAL FROM MAGAZINE DOOR IF ASTRAGAL IS PRESENT. (A)

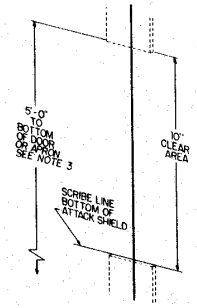

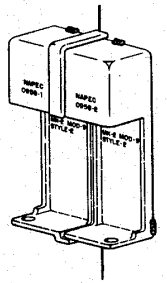

STEP 2

NOTE: LOCATOR BUTTONS HAVE BEEN CAST ONTO THE HASP TO AID INSTALLATION. POSITION HASP ON DOORS USING THE BUTTONS TO ESTABLISH CLEARANCE. TACK WELD HASP ONTO DOORS.

NOTE: USE WELDING ELECTRODE 310-15 OR 310-16, $\frac{3}{32}$ DIA. (A)

STEP 3

OPEN DOOR AND FINISH WELDING.*

CAUTION

DO NOT WELD ON DOOR EDGES.
GRIND OFF LOCATOR BUTTONS!!
CLOSE DOORS.

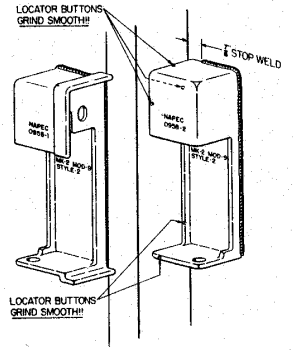

ZONE	LTR	REVISIONS DESCRIPTION	DATE	D C S APPROVAL
	A	SEE NOR 1404 A		

APPLICATIONS

LEFT HAND DOOR OPENING FIRST WITH ASTRACAL

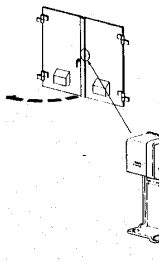

LEFT HAND DOOR OPENING FIRST WITHOUT ASTRACAL

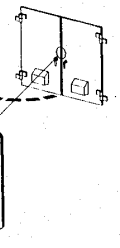

SINGLE DOOR HINGED LEFT SWINGING OUT

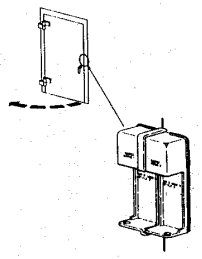

DOUBLE SLIDING DOORS ON INSIDE OR OUTSIDE OF JAMB

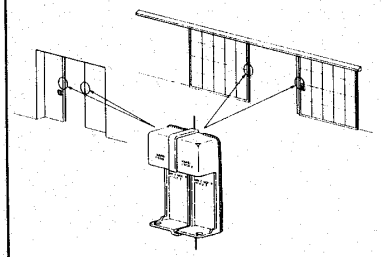

SLIDING DOORS MOVING LEFT TO OPEN WITH DOOR ON OUTSIDE OF JAMB

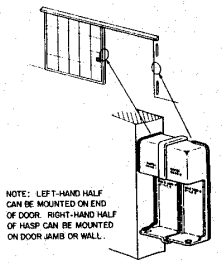

NOTE: LEFT-HAND HALF CAN BE MOUNTED ON END OF DOOR. RIGHT-HAND HALF OF HASP CAN BE MOUNTED ON DOOR JAMB OR WALL.

SINGLE DOOR HINGED RIGHT OPENING IN

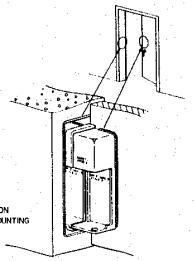

NOTE: INSTALLATION REQUIRES WALL MOUNTING BOX NAPEC 1286

SLIDING DOOR MOVING LEFT TO OPEN WITH DOOR ON INSIDE OF JAMB

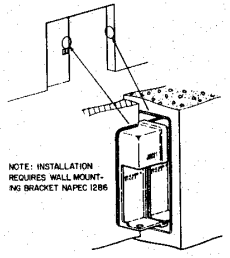

NOTE: INSTALLATION REQUIRES WALL MOUNTING BRACKET NAPEC 1286

FIND NO.	QTY REQ.	CODE IDENT	PART, DRAWING OR SPEC NO.	NOMENCLATURE/DESCRIPTION	REMARKS

PARTS LIST

NEXT ASSY	USED ON
APPLICATION	

SYMBOLS: (1) ITEM; (A) APPLY ITEM; ITEM (CAUTION); ITEM (CAUTION); SHEET (A) WELD ITEM (CAUTION)

DO NOT SCALE DRAWING
UNLESS OTHERWISE SPECIFIED, DIMENSIONS ARE IN INCHES
TOLERANCES
XX DECIMALS ±
XXX DECIMALS ±
FRACTIONS ±
ANGLES ±
SCALE

	INITIALS	DATE
EXAMINED		
EXAMINED		
SAFETY		
ENGINEER		
CHECKED		
DESIGNED DRAWN		

APPROVED 2 Aug 82

NAVAL AMMUNITION PRODUCTION ENGINEERING CENTER CRANE, IN 47522

DEPARTMENT OF THE NAVY NAVAL SEA SYSTEMS COMMAND WASHINGTON, DC 20362

HIGH SECURITY HASP APPLICATION AND INSTALLATION INSTRUCTIONS FOR MK 2 MOD 9 STYLE 2

SIZE	CODE IDENT NO.	NAVAMPRDENGCEN DWG NO.
F	53711	1404

SHEET 1 OF 1

NOTICE: THE CONTENTS AND DESIGN DETAILS OF THIS DRAWING WERE DEVELOPED BY THE NAVAL AMMUNITION PRODUCTION ENGINEERING CENTER AND ARE UNITED STATES GOVERNMENT PROPERTY.

NAPSEA 5532334 SHEET 1 OF 3

A

NOTES

1. INTERPRET DRAWING IN ACCORDANCE WITH MIL-STD-100
2. REMOVE BURRS AND SHARP EDGES
3. INVESTMENT CASTING TO MIL-C-6021 CLASS 2B.
4. ZYGLO PER MIL-I-6866
5. FINISH NAS-823-C-12
6. REMELT MATL ACCEPTABLE, NO SLAG OR FOREIGN ALLOYS.
7. SURFACE REQT: NAS 823 C/25
8. LINEAR TOL (CASTINGS)

UP TO ½	±.007
" " 1"	±.010
" " 2	±.013
" " 3	±.016
" " 4	±.019
" " 5	±.022
" " 6	±.025
" " 7	±.028
" " 8	±.031
" " 9	±.034
" " 10	±.037

MAX. VARIATION ±.040

9. FORMERLY NAPEC DWG. NO. 0957 REV C

REVISIONS					
ZONE	LTR	DESCRIPTION	DATE	APPROVAL D	C	B
	A	SEE NOR 5532334 A	3/4/82			

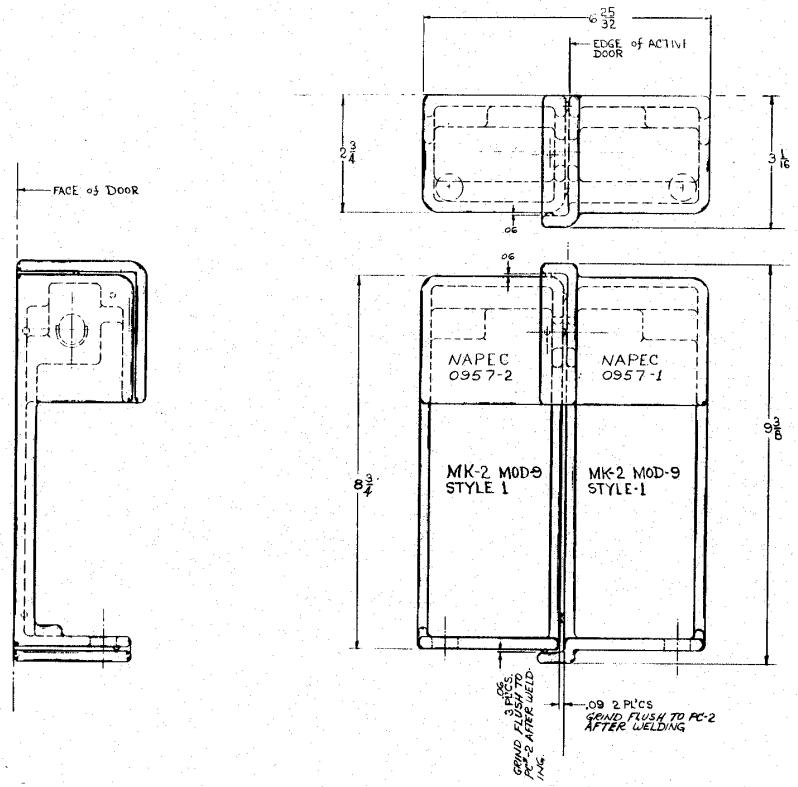

A	A	A
1	2	3
REVISION STATUS OF SHEETS		

FIND NO.	QTY REQ	CODE IDENT	PART, DRAWING OR SPEC NO.	NOMENCLATURE/DESCRIPTION	REMARKS
-2	1	CF-3	SEE NOTES AMS 5370	CASTING, PASSIVE DOOR	SEE NOTES 1 THRU 8
-1	1			CASTING, ACTIVE DOOR	

PARTS LIST

NEXT ASSY | USED ON

APPLICATION

SYMBOLS: ITEM; WELD ITEM; ITEM CALLOUT; WELD ITEM CALLOUT

DO NOT SCALE DRAWING UNLESS OTHERWISE SPECIFIED, DIMENSIONS ARE IN INCHES

TOLERANCES: XX DECIMALS ± .SEE; XXX DECIMALS ± NOTE; FRACTIONS ± ; ANGLES ± *8

SCALE: FULL

	INITIALS	DATE
EXAMINED		
EXAMINED		
SAFETY		
ENGINEER		
CHECKED		
DESIGNED	RJS	4-75 4-82
APPROVED	EJ TMP	10 82

NAVAL AMMUNITION PRODUCTION ENGINEERING CENTER CRANE, IN 47522

DEPARTMENT OF THE NAVY NAVAL SEA SYSTEMS COMMAND WASHINGTON, DC 20362

HIGH SECURITY HASP MK-2 MOD-9
HINGED OR SLIDING HORIZONTAL DOOR
RIGHT-HAND STYLE-1

SIZE F | CODE IDENT NO. 63711 | 5532334 | DWG NO. 5532334 | REV A

SHEET 1 OF 3

NOTICE: THE CONTENTS AND DESIGN DETAIL OF THIS DRAWING WERE DEVELOPED BY THE NAVAL AMMUNITION PRODUCTION ENGINEERING CENTER AND ARE UNITED STATES GOVERNMENT PROPERTY

NAVSEA DRAWING NO. 5532334 SHEET 3 OF 3

NOTES
1. INTERPRET DRAWING IN ACCORDANCE WITH MIL-STD-100.
2. REMOVE BURRS AND SHARP EDGES

REVISIONS					
ZONE	LTR	DESCRIPTION	DATE	APPROVAL	
	A	SEE NOR 5532334 A			

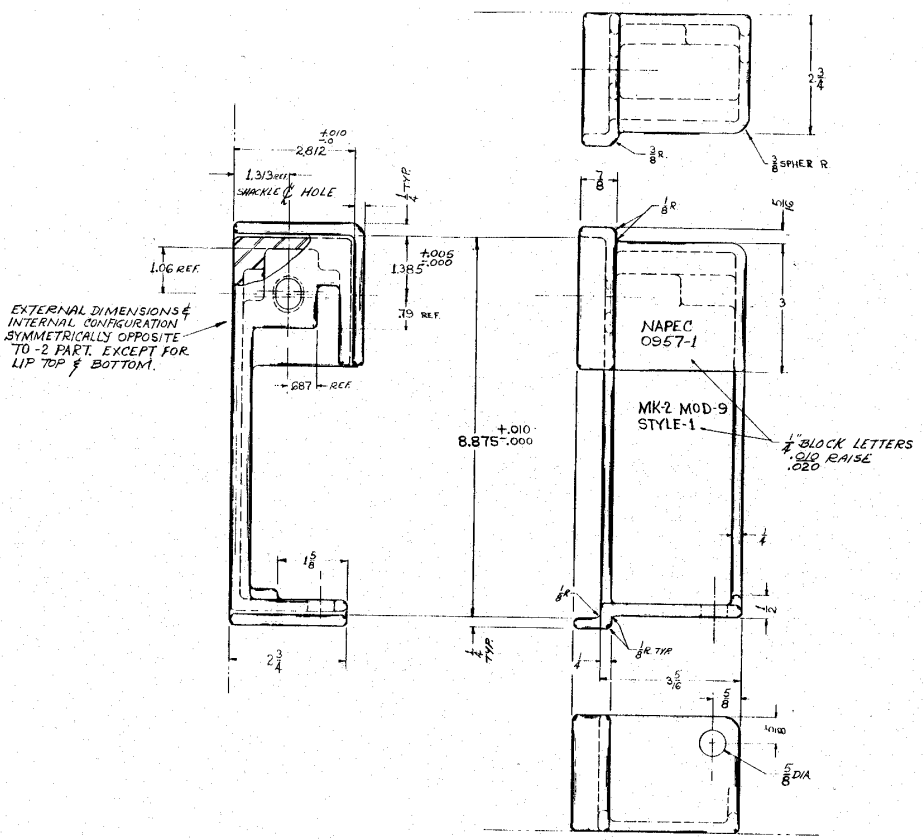

(1) NAPEC # 0957
CASTING, ACTIVE DOOR
STAINLESS STEEL 304 L CF-3
AMS 5370

FIND NO.	QTY REQ	CODE IDENT	PART, DRAWING OR SPEC NO.	NOMENCLATURE/DESCRIPTION	REMARKS
-1	1		304 L CF-3	CASTING, ACTIVE DOOR	SEE NOTES SHT. #1

PARTS LIST

NEXT ASSY	USED ON	SYMBOLS: ITEM; WELD ITEM; ITEM CALLOUT; WELD ITEM CALLOUT	DO NOT SCALE DRAWING. UNLESS OTHERWISE SPECIFIED DIMENSIONS ARE IN INCHES. TOLERANCES: XX DECIMALS ± SEE; XXX DECIMALS ± SHT.; FRACTIONS ± #1; ANGLES ±	INITIALS / DATE: EXAMINED, EXAMINED, SAFETY, ENGINEER, CHECKED, DESIGNED GJS 4-82	NAVAL AMMUNITION PRODUCTION ENGINEERING CENTER CRANE, IN 47522 — DEPARTMENT OF THE NAVY NAVAL SEA SYSTEMS COMMAND WASHINGTON, DC 20362
APPLICATION			SCALE: FULL	APPROVED EL INGP 10 82	HIGH SECURITY HASP MK-2 MOD-9 HINGED OR SLIDING HORIZONTAL DOOR DETAIL
					SIZE F — CODE IDENT NO. 53711 — NAVSEA 5532334 — DWG NO — DATE 9-82 — SHEET 3 OF 3

NOTICE: THE CONTENTS AND DESIGN DETAIL OF THIS DRAWING WERE DEVELOPED BY THE NAVAL AMMUNITION PRODUCTION ENGINEERING CENTER AND ARE UNITED STATES GOVERNMENT PROPERTY

NAVSEA DRAWING NO. 5532334 SHEET 2 OF 3

NOTES
1. INTERPRET DRAWING IN ACCORDANCE WITH MIL-STD-100.
2. REMOVE BURRS AND SHARP EDGES

ZONE	LTR	REVISIONS DESCRIPTION	DATE	D	C	S APPROVAL
	A	SEE NOR 5532334 A	5/6/87			

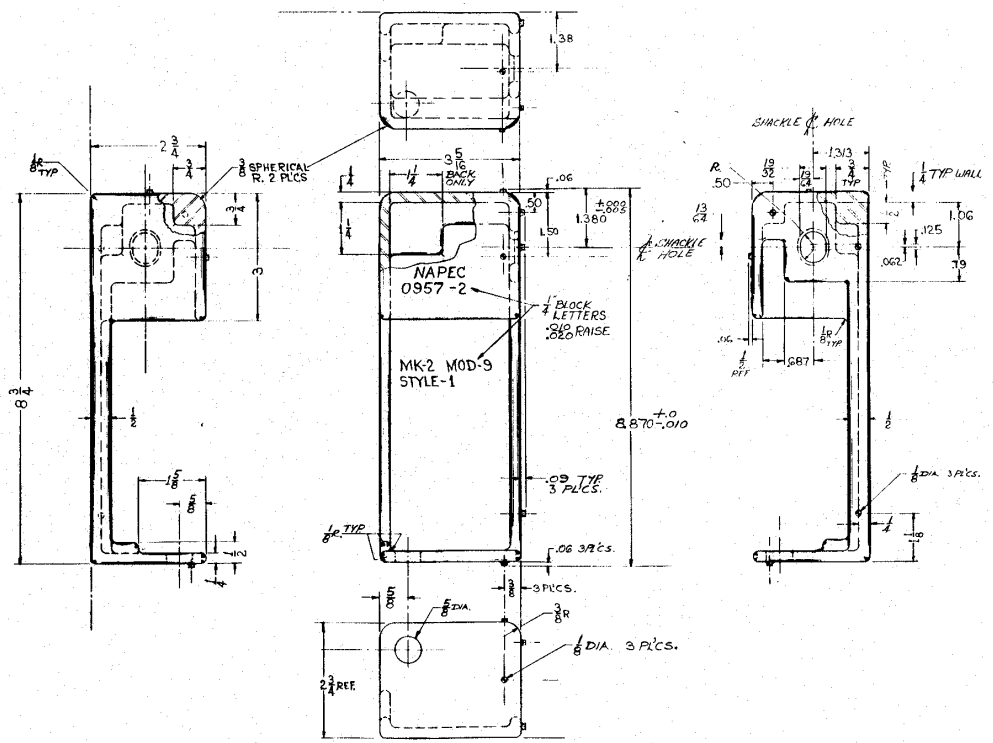

(2) NAPEC # 0957
CASTING, PASSIVE DOOR
STAINLESS STEEL 304L CF-3
AMS 5370

FIND NO.	QTY REQ	CODE IDENT	PART, DRAWING OR SPEC NO.	NOMENCLATURE/DESCRIPTION	REMARKS
-2	1		304L, CF-3	CASTING, PASSIVE DOOR	SEE NOTES SHT #1

PARTS LIST

NEXT ASSY	USED ON
APPLICATION	

SYMBOLS: ITEM; WELD ITEM; ITEM CALLOUT; WELD ITEM CALLOUT

DO NOT SCALE DRAWING
UNLESS OTHERWISE SPECIFIED, DIMENSIONS ARE IN INCHES
TOLERANCES: XX DECIMALS ± SEE; XXX DECIMALS ± SHEET; FRACTIONS ± #1; ANGLES ±
SCALE: FULL

	INITIALS	DATE
EXAMINED		
EXAMINED		
SAFETY		
ENGINEER		
CHECKED		
DESIGNED	GJS	4-82
APPROVED	22/2	82

NAVAL AMMUNITION PRODUCTION ENGINEERING CENTER CRANE, IN 47522

DEPARTMENT OF THE NAVY NAVAL SEA SYSTEMS COMMAND WASHINGTON, DC 20362

HIGH SECURITY HASP MK-2 MOD-9 HINGED OR SLIDING HORIZONTAL DOOR DETAIL

SIZE	CODE IDENT NO.	NAVSEA	DWG NO	DATE
F	53711	5532334		9-82

SHEET 2 OF 3

NOTICE: THE CONTENTS AND DESIGN DETAIL OF THIS DRAWING WERE DEVELOPED BY THE NAVAL AMMUNITION PRODUCTION ENGINEERING CENTER AND ARE UNITED STATES GOVERNMENT PROPERTY

NAVSEA DRAWING NO. 5532335 SHEET 1 OF 3

(A)

NOTES
1. INTERPRET DRAWING IN ACCORDANCE WITH MIL-STD-100.
2. REMOVE BURRS AND SHARP EDGES
3. INVESTMENT CASTINGS PER MIL-C-6021 CLASS 2B
4. ZYGLO PER MIL-I-6866
5. FINISH NAS-823-C12
6. REMELT MAT'L. ACCEPTABLE, NO SLAG OR FOREIGN ALLOYS.
7. SURFACE REQ'T. NAS-823C/25.
8. LINEAR TOL. (CASTINGS)
   UP TO 1/2" ±.007
   " " 1" ±.010
   " " 2" ±.013
   " " 3" ±.016
   " " 4" ±.019
   " " 5" ±.022
   " " 6" ±.025
   " " 7" ±.028
   " " 8" ±.031
   " " 9" ±.034
   " " 10" ±.037
   MAX. VARIATION .040
9. FORMERLY NAPEC DWG. NO. 0958 REV C

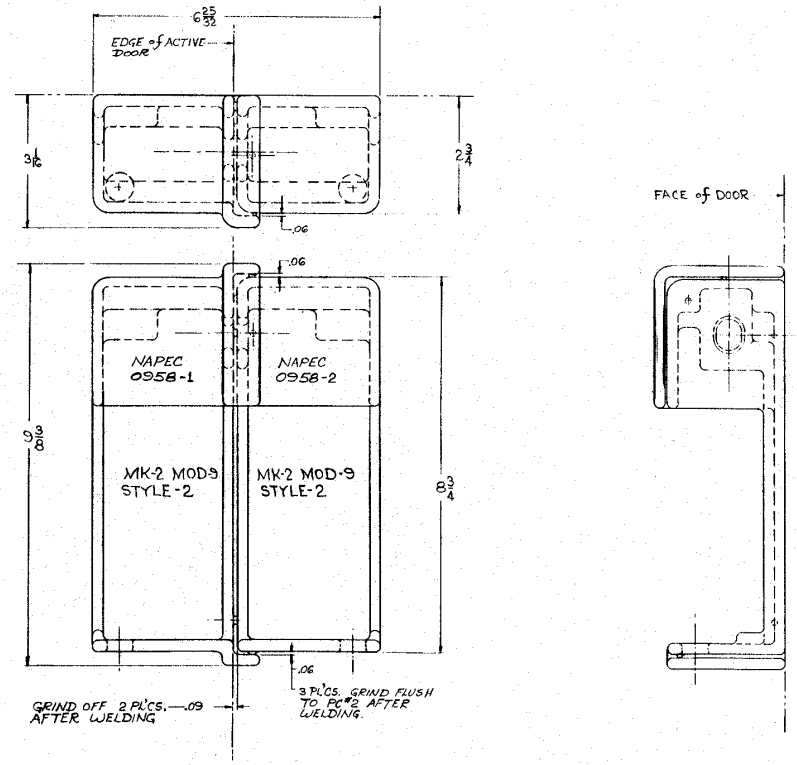

REVISIONS					
ZONE	LTR	DESCRIPTION	DATE	APPROVAL	
	A	SEE NOR 5532335 A	3/4/85		

A	A	A
1	2	3
REVISION STATUS OF SHEETS		

(A)

FIND NO.	QTY REQ	CODE IDENT	PART, DRAWING OR SPEC NO.	NOMENCLATURE/DESCRIPTION	REMARKS
-2	1		CF-3 304-L AMS 5370	CASTING, PASSIVE DOOR	SEE NOTES 1 THRU 8
-1	1			CASTING, ACTIVE DOOR	

PARTS LIST

NEXT ASSY	USED ON
APPLICATION	

SYMBOLS: ITEM; WELD ITEM; ITEM CALLOUT; WELD ITEM CALLOUT

DO NOT SCALE DRAWING
UNLESS OTHERWISE SPECIFIED DIMENSIONS ARE IN INCHES
TOLERANCES: XX DECIMALS ± SEE; XXX DECIMALS ± NOTE; FRACTIONS ± ; ANGLES ± #8
SCALE: FULL

	INITIALS	DATE
EXAMINED		
EXAMINED		
SAFETY		
ENGINEER		
CHECKED		
DESIGNED DRAWN	GJS	4-82
APPROVED		22 ISEP 1982

NAVAL AMMUNITION PRODUCTION ENGINEERING CENTER CRANE, IN 47522

DEPARTMENT OF THE NAVY NAVAL SEA SYSTEMS COMMAND WASHINGTON, DC 20555

HIGH SECURITY HASP MK-2 MOD 9
HINGED OR SLIDING HORIZONTAL DOOR
LEFT HAND STYLE-2

SIZE	CODE IDENT NO	NAVSEA DWG. NO.	DATE
F	53711	5532335	9-82

SHEET 1 OF 3

NOTICE: THE CONTENTS AND DESIGN DETAIL OF THIS DRAWING WERE DEVELOPED BY THE NAVAL AMMUNITION PRODUCTION ENGINEERING CENTER AND ARE UNITED STATES GOVERNMENT PROPERTY

NAVSEA DRAWING NO. 5532335 SHEET 2 OF 3

(A)

NOTES
1. INTERPRET DRAWING IN ACCORDANCE WITH MIL-STD-100.
2. REMOVE BURRS AND SHARP EDGES

REVISIONS					
ZONE	LTR	DESCRIPTION	DATE	APPROVAL	
	A	SEE NOR 5532335 A			

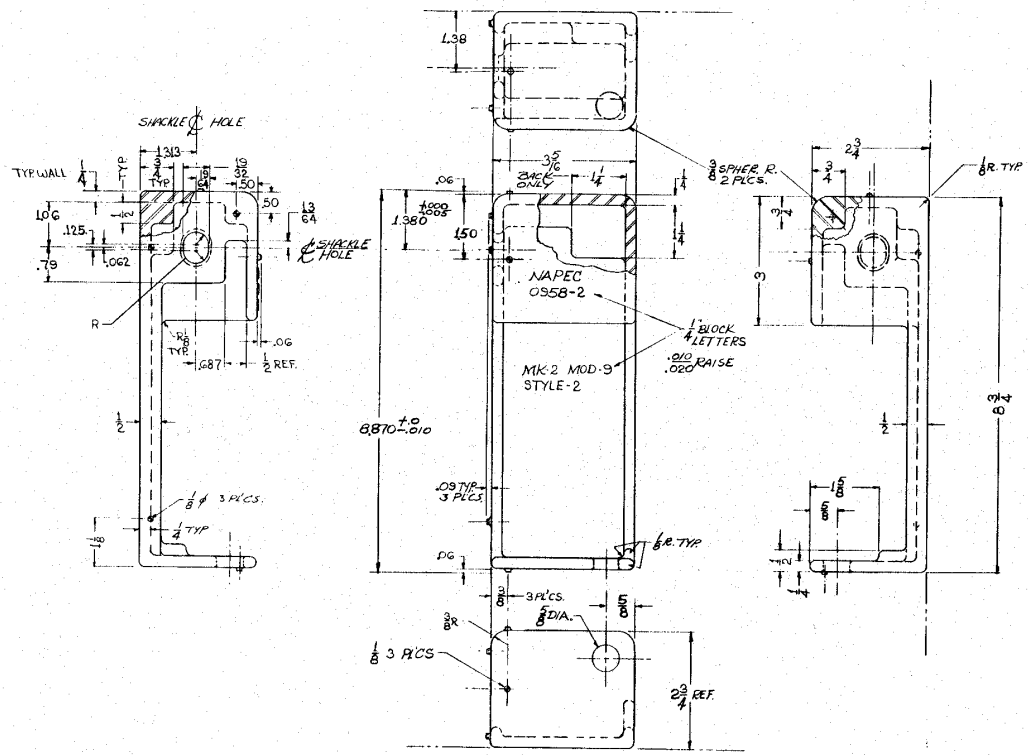

(2) NAPEC #0958
CASTING, PASSIVE DOOR
304 L CF-3
AMS 5370

FIND NO.	QTY REQ	CODE IDENT	PART, DRAWING OR SPEC NO.	NOMENCLATURE/DESCRIPTION	REMARKS
-2	1		304L CF-3	CASTING PASSIVE DOOR	SEE NOTES SHT #1

PARTS LIST

NEXT ASSY	USED ON
APPLICATION	

SYMBOLS: ITEM; WELD ITEM; ITEM CALLOUT; WELD ITEM CALLOUT

DO NOT SCALE DRAWING
UNLESS OTHERWISE SPECIFIED, DIMENSIONS ARE IN INCHES
TOLERANCES: XX DECIMALS ± SEE NOTES SHT #1; XXX DECIMALS ± SEE NOTES SHT #1; FRACTIONS ± SEE NOTES SHT #1; ANGLES ± SEE NOTES SHT #1

SCALE: FULL

	INITIALS	DATE
EXAMINED		
EXAMINED		
SAFETY		
ENGINEER		
CHECKED		
DESIGNED	GJS	4-82
APPROVED	22 DEC 1982	

NAVAL AMMUNITION PRODUCTION ENGINEERING CENTER CRANE, IN 47522

DEPARTMENT OF THE NAVY NAVAL SEA SYSTEMS COMMAND WASHINGTON, DC 20362

HIGH SECURITY HASP MK-2 MOD-9
HINGED OR SLIDING HORIZONTAL DOOR
LEFT HAND STYLE 2

SIZE	CODE IDENT NO	NAVSEA DWG NO.	DATE
F	53711	5532335	9-82

SHEET 2 OF 3

NOTICE: THE CONTENTS AND DESIGN DETAIL OF THIS DRAWING WERE DEVELOPED BY THE NAVAL AMMUNITION PRODUCTION ENGINEERING CENTER AND ARE UNITED STATES GOVERNMENT PROPERTY

NAVSEA DRAWING NO. 5532335 SHEET 3 OF 3

(A)

NOTES
1. INTERPRET DRAWING IN ACCORDANCE WITH MIL-STD-100.
2. REMOVE BURRS AND SHARP EDGES

REVISIONS					
ZONE	LTR	DESCRIPTION	DATE	APPROVAL	
	A	SEE NOR 5532335 A	3/4/85		

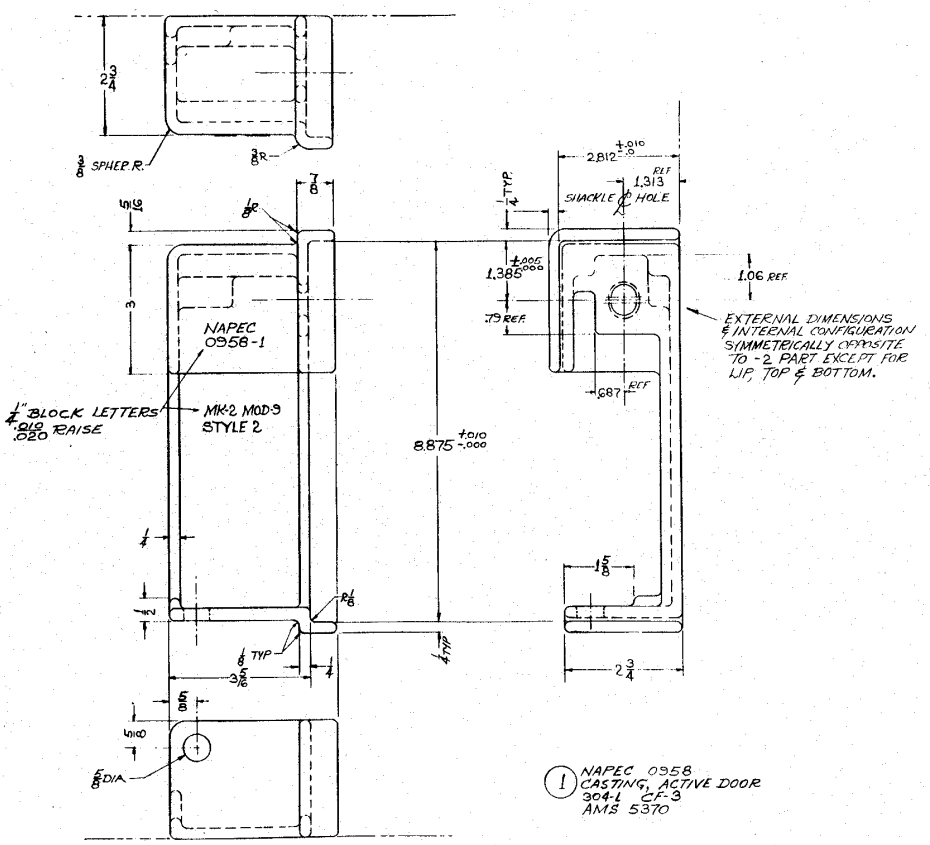

(1) NAPEC 0958
CASTING, ACTIVE DOOR
304-L CF-3
AMS 5370

FIND NO.	QTY REQ	CODE IDENT	PART, DRAWING OR SPEC NO.	NOMENCLATURE/DESCRIPTION	REMARKS
-1	1		304L, CF-3	CASTING, ACTIVE DOOR	SEE NOTES SHT #1

PARTS LIST

NAVAL AMMUNITION PRODUCTION ENGINEERING CENTER CRANE, IN 47522

DEPARTMENT OF THE NAVY NAVAL SEA SYSTEMS COMMAND WASHINGTON, DC 20362

HIGH SECURITY HASP MK-2 MOD-9
HINGED OR SLIDING HORIZONTAL DOOR
LEFT HAND STYLE 2

SIZE	CODE IDENT NO.	NAVSEA DWG NO.	DATE
F	53711	5532335	9-82

SHEET 3 OF 3

DO NOT SCALE DRAWING
UNLESS OTHERWISE SPECIFIED, DIMENSIONS ARE IN INCHES
TOLERANCES
XX DECIMALS .SEE
XXX DECIMALS .NOTE
FRACTIONS .SHT #1
ANGLES
SCALE FULL

	INITIALS	DATE
EXAMINED		
EXAMINED		
SAFETY		
ENGINEER		
CHECKED		
DESIGNED	GJS	4-82
APPROVED	23 SEP 1982	

NEXT ASSY | USED ON
APPLICATION

ZONE	LTR	DESCRIPTION	DATE	APPROVAL
2 C 4 F	A	ADDED REVISION STATUS BLOCK CHANGED DEPICTION	7-24-63	

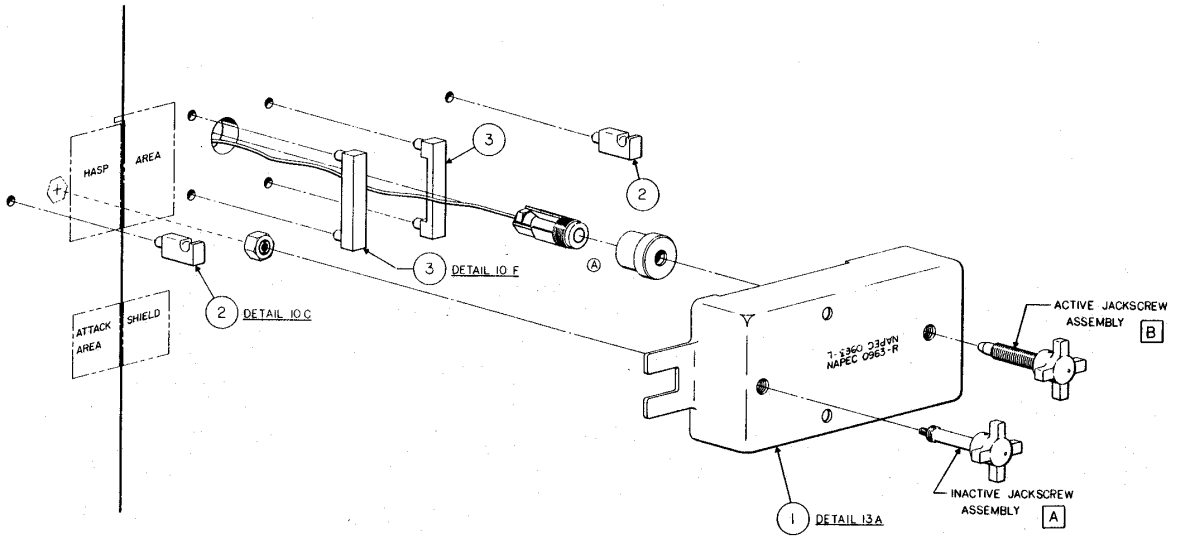

Ⓐ

A	-	A	B	A
A	-	-	A	A
1	2	3	4	5

REVISION STATUS OF SHEETS

ITEM	NOMENCLATURE	ZONE
B	ACTIVE JACKSCREW ASSEMBLY	28 A
A	INACTIVE JACKSCREW ASSEMBLY	20 C

SCALE: NONE

SIZE F

APPROVED

DRAWN		
CHECKED		
SUPERV		6/79
ENGINEER	NRDH	3-79
CHECKED		
ENGINEER	G J Sallade	6/77

AIB SYSTEM
FOR
HIGH SECURITY
HASP
GENERAL
ASSEMBLY

DEPARTMENT OF THE NAVY
NAVAL SEA
SYSTEMS COMMAND
NAVAL AMMUNITION PRODUCTION
ENGINEERING CENTER
CRANE, INDIANA

DRAWING NO. 5371I-5532336

SHEET 1 OF 5

NOTICE: THE CONTENTS AND DESIGN DETAIL OF THIS DRAWING WERE DEVELOPED BY THE NAVAL AMMUNITION PRODUCTION ENGINEERING CENTER AND ARE UNDER STATUS MAINTENANCE PROPERTY.

DRAWING NO. 5371I-5532336

SHEET 1 OF 5

NOTICE:

5371I-5532336 SHEET 2 OF 5

NOTE:

1. INVESTMENT CASTINGS TO MIL-C-6021 CLASS 4
2. FORMERLY NAPEC DWG. NO. 0963 REV. C
3. FINISH NAS-823 C-12
4. REMELT 304L MATL., ACCEPTABLE NO SLAG OR FOREIGN ALLOYS
5. SPCL. NOTE, LINEAR TOLERANCES (CASTING) PER INVESTMENT CASTING HANDBOOK INVESTMENT CASTING INSTITUTE, SEPT. 1979 (NORMAL LINEAR TOLERANCES)

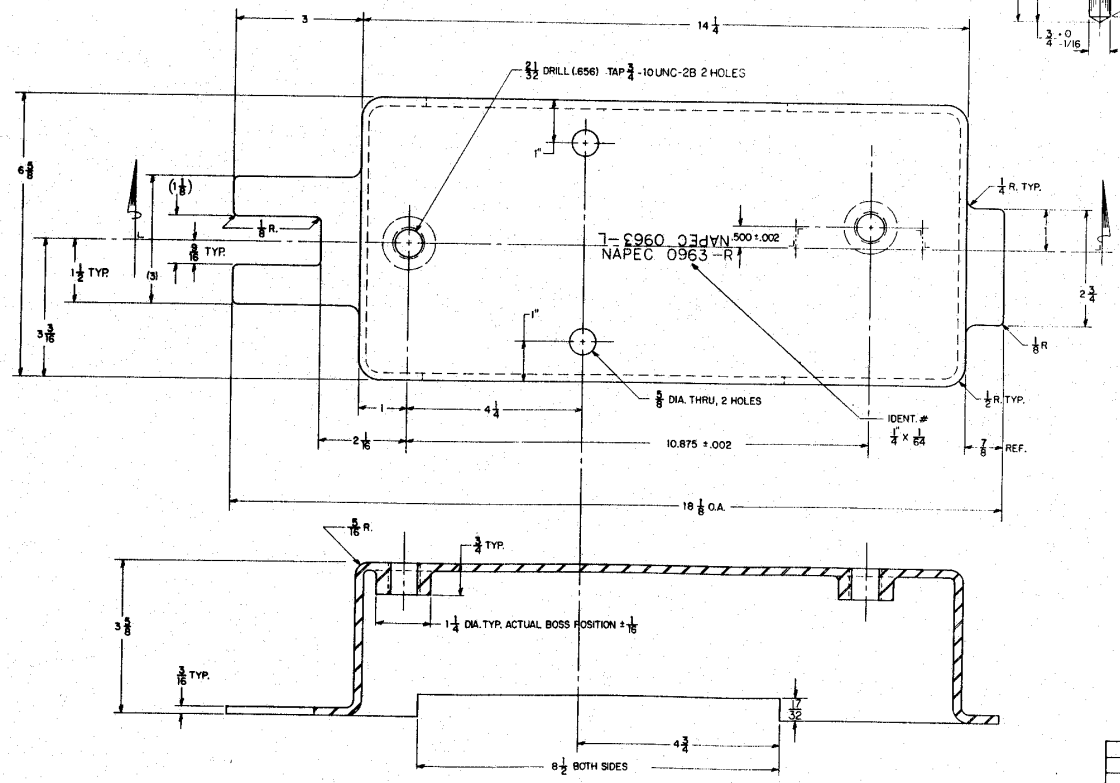

(1) DETAIL 13A
AIB HOUSING
MATL. STAINLESS TYPE 304L LOW CARBON ASTM A743 (CF-3)
FINISH - GRIT BLAST WITH ALUMINUM OXIDE PER MIL-A-1230 TYPE #1

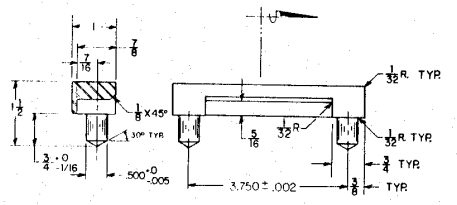

(3) DETAIL 10 F
A.I.B. LUG
MATL. SAME AS #1

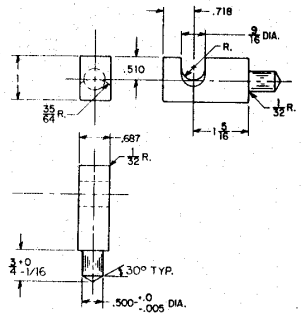

(2) DETAIL 10 C
A.I.B. STAPLE
MATL. SAME AS #1

ITEM	NOMENCLATURE	REQD.	REMARKS
3	AIB LUG	2	304 L SST
2	AIB STAPLE	2	304L SST
1	AIB HOUSING	1	304L SST

AIB SYSTEM FOR HIGH SECURITY HASP
AIB HOUSING DETAILS

DEPARTMENT OF THE NAVY
NAVAL SEA SYSTEMS COMMAND
NAVAL AMMUNITION PRODUCTION ENGINEERING CENTER
CRANE, INDIANA

DRAWING NO. 5371I-5532336
SHEET 2 OF 5

SCALE 1/1 SIZE F

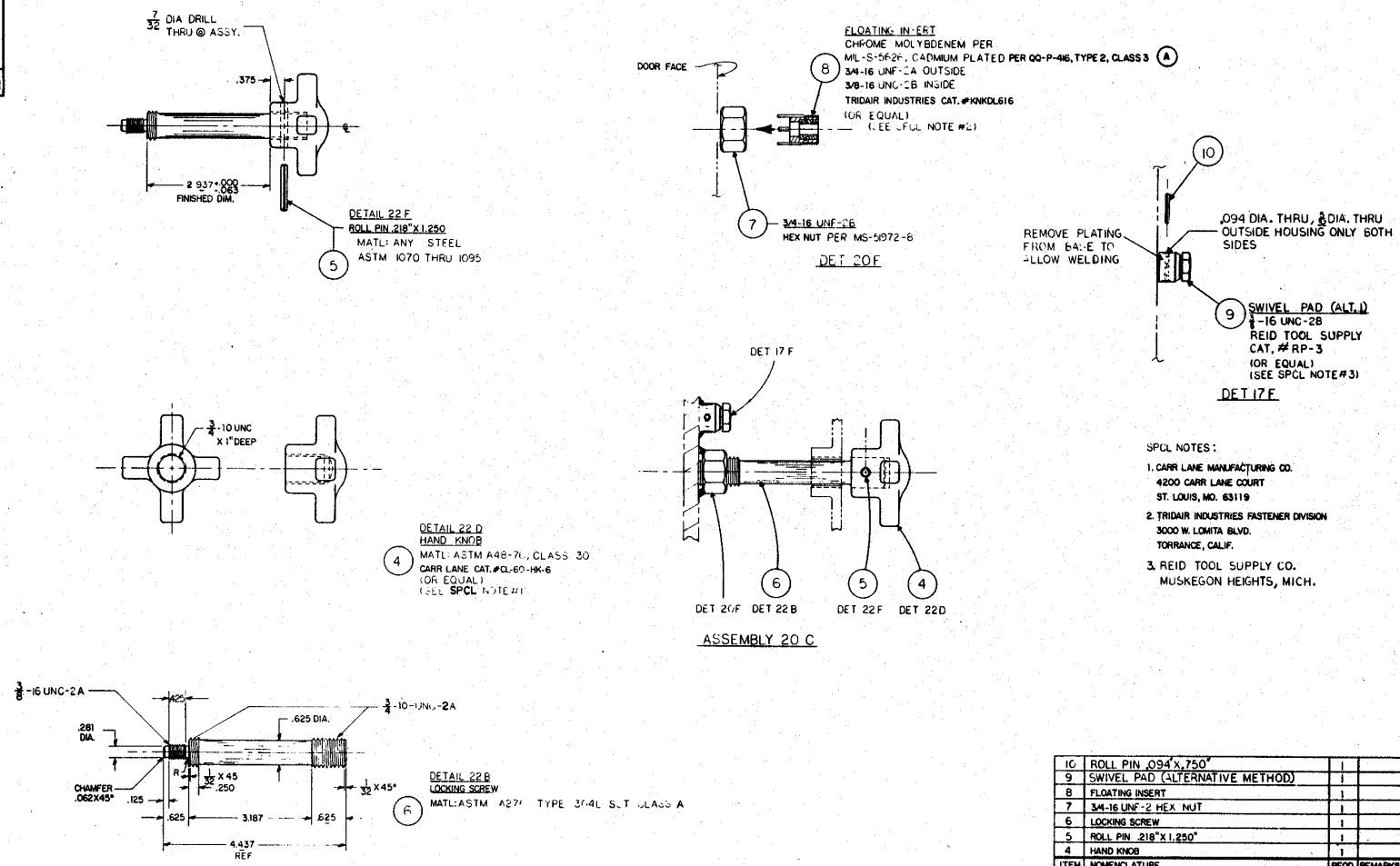

SPCL NOTES:

1. CARR LANE MANUFACTURING CO.
   4200 CARR LANE COURT
   ST. LOUIS, MO. 63119
2. TRIDAIR INDUSTRIES FASTENER DIVISION
   3000 W. LOMITA BLVD.
   TORRANCE, CALIF.
3. REID TOOL SUPPLY CO.
   MUSKEGON HEIGHTS, MICH.

ITEM	NOMENCLATURE	REQD.	REMARKS
10	ROLL PIN .094"X.750"	1	
9	SWIVEL PAD (ALTERNATIVE METHOD)	1	
8	FLOATING INSERT	1	
7	3/4-16 UNF-2 HEX NUT	1	
6	LOCKING SCREW	1	
5	ROLL PIN .218"X 1.250"	1	
4	HAND KNOB	1	

REVISIONS			
A	SEE NOR 5532336 A		

AIB SYSTEM FOR HIGH SECURITY HASP

INACTIVE JACKSCREW SYSTEM DETAILS

DEPARTMENT OF THE NAVY
NAVAL SEA SYSTEMS COMMAND
NAVAL AMMUNITION PRODUCTION ENGINEERING CENTER
CRANE, INDIANA

DRAWING NO. 5371-5532336
SHEET 3 OF 5

SCALE 1/1

REVISIONS						
ZONE	LTR	DESCRIPTION	DATE	APPROVAL		
29C	A	CHANGED DEPICTION				
28C	B	CHANGED BUSHING				

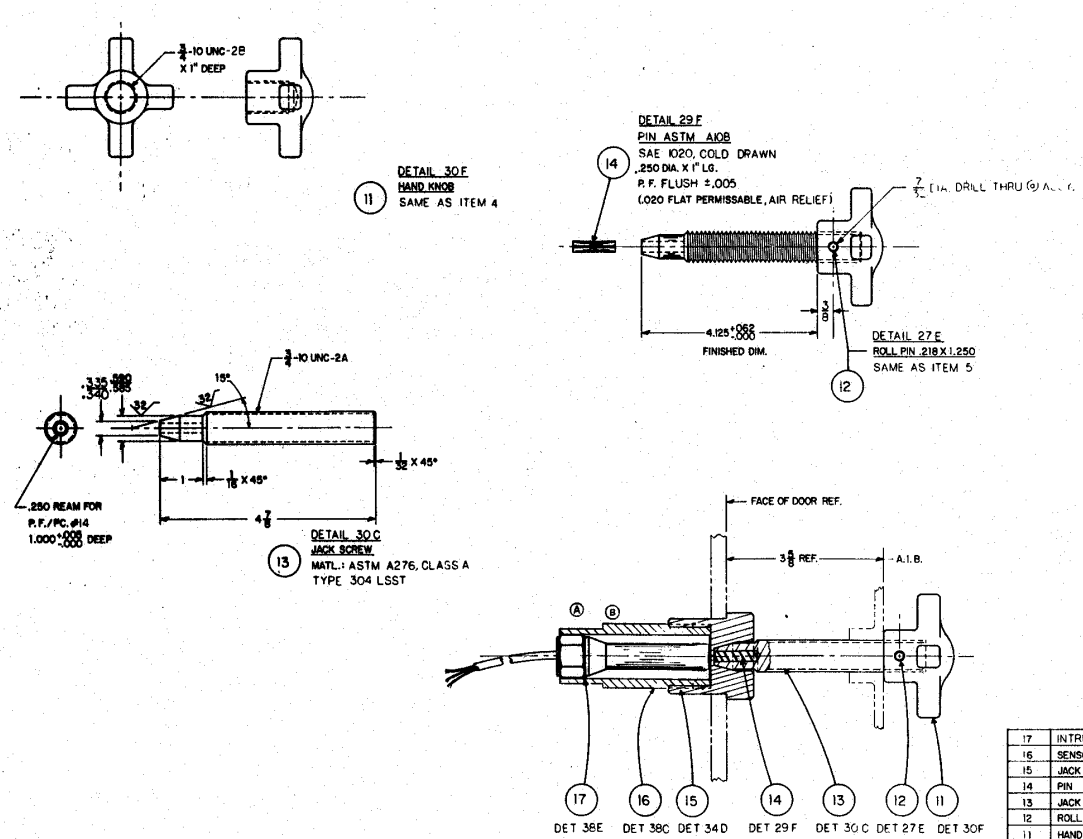

ASSEMBLY 28A

ITEM	NOMENCLATURE	REQD.	REMARKS
17	INTRUSION SENSOR	1	SEE SHEET 5
16	SENSOR BUSHING	1	SEE SHEET 5
15	JACK SCREW BUSHING	1	SEE SHEET 5
14	PIN	1	C.R.S.
13	JACK SCREW	1	304 LSST
12	ROLL PIN .218 X 1.250	1	STD.
11	HAND KNOB	1	

AIB SYSTEM FOR HIGH SECURITY HASP

ACTIVE JACKSCREW SYSTEM DETAILS

DEPARTMENT OF THE NAVY
NAVAL SEA SYSTEMS COMMAND
NAVAL AMMUNITION PRODUCTION ENGINEERING CENTER
CRANE, INDIANA

DRAWING NO. 5371I-5532336
SHEET 4 OF 5

SCALE 1/1 SIZE F

DRAWN FROH 3-79
G.J. SANADE 6/77

NOTICE: THE DRAWINGS AND DESIGNS DETAIL OF THIS DRAWING WERE DEVELOPED BY THE NAVAL AMMUNITION PRODUCTION ENGINEERING CENTER AND ARE UNITED STATES GOVERNMENT PROPERTY.

REVISIONS				
SHEET	LTR	DESCRIPTION	DATE	APPROVED
38F 39C	A	REFLECT DIMENSION CHANGE CHANGED DIMENSIONS	3-29-83	

5378-5532336
SHEET 5 OF 5

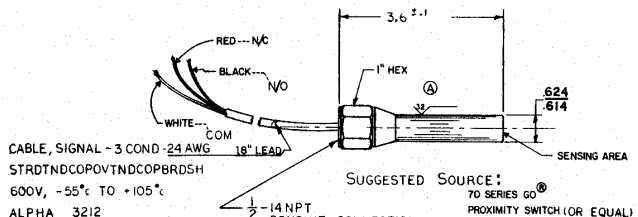

CABLE, SIGNAL - 3 COND - 24 AWG 18" LEAD
STRDTNDCOPOVTNDCOPBRDSH
600V, -55°c TO +105°c
ALPHA 3212

SUGGESTED SOURCE:
70 SERIES GO®
PROXIMITY SWITCH (OR EQUAL)
AVAILABLE FROM
GENERAL EQUIPMENT & MFG. CO.
3300 FERN VALLEY RD.
LOUISVILLE, KY.

(17) DETAIL 38 E
INTRUSION
SENSOR

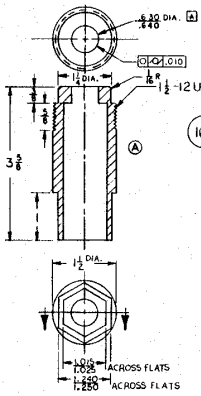

(16) DETAIL 38 C
SENSOR BUSHING
MATL: ASTM A743,
GRADE 304L (CF-3)
SEE NOTE 1

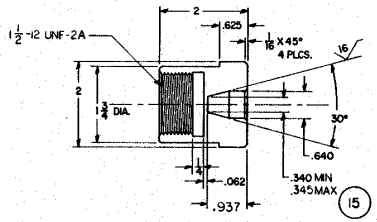

(15) DETAIL 34 D
JACK SCREW BUSHING
MATL: ASTM A276
TYPE 304 LSST

SCALE 1/1	APPROVED		AIB SYSTEM FOR HIGH SECURITY HASP	DEPARTMENT OF THE NAVY NAVAL SEA SYSTEMS COMMAND NAVAL AMMUNITION PRODUCTION ENGINEERING CENTER GRAND, INDIANA
	DESIGNED		ACTIVE JACKSCREW SYSTEM DETAILS	DRAWING NO. 5378-5532336 SHEET 5 OF 5
	DRAWN R BOH 3-79			
	TRACED			
	CHECKED			

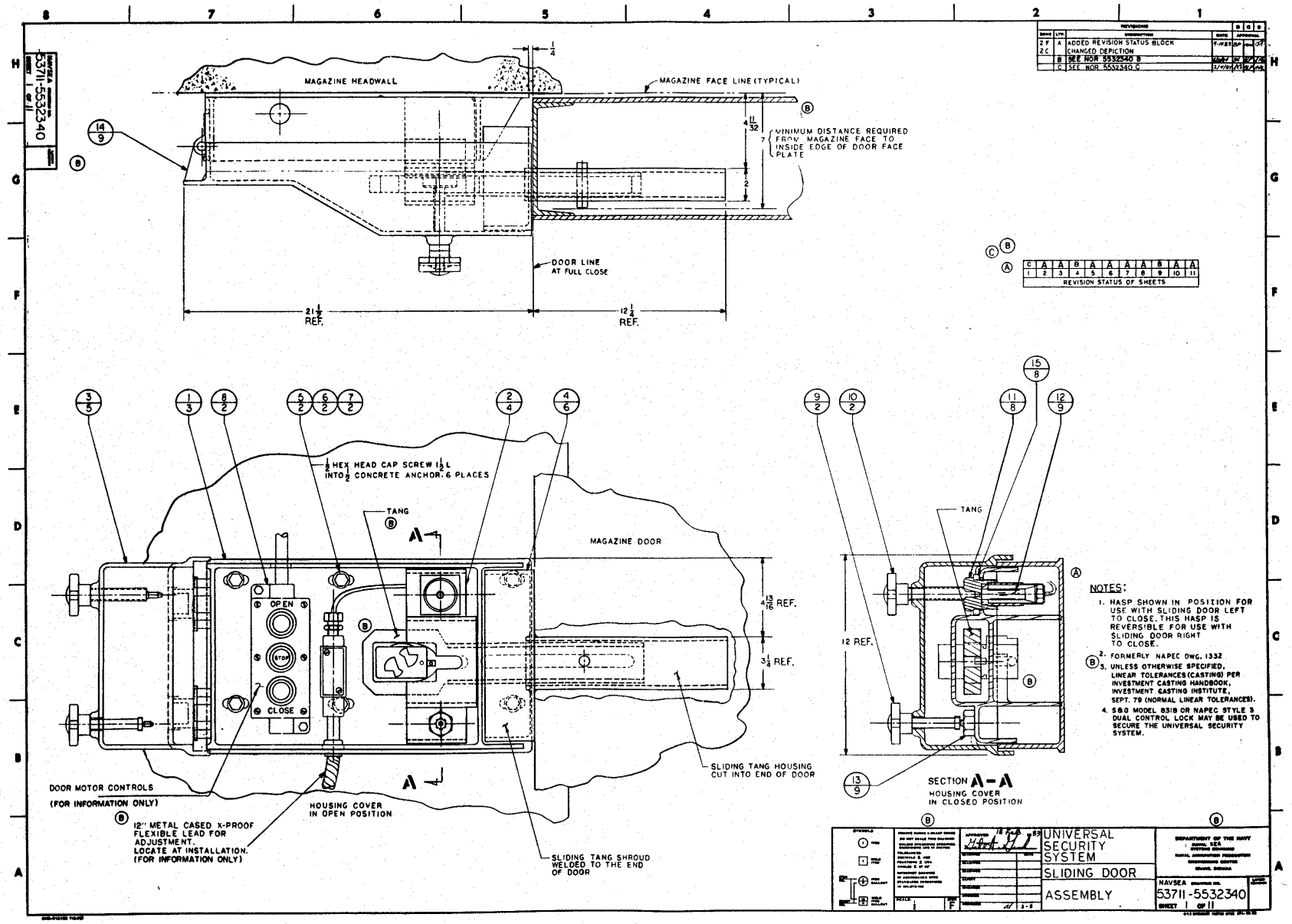

MAGAZINE HEADWALL
MAGAZINE FACE LINE (TYPICAL)
MINIMUM DISTANCE REQUIRED FROM MAGAZINE FACE TO INSIDE EDGE OF DOOR FACE PLATE
DOOR LINE AT FULL CLOSE
21 1/2 REF.
12 1/4 REF.
1/2 HEX HEAD CAP SCREW 1 1/2 L INTO 1/2 CONCRETE ANCHOR. 6 PLACES
TANG
MAGAZINE DOOR
OPEN
STOP
CLOSE
4 13/16 REF.
3 1/4 REF.
SLIDING TANG HOUSING CUT INTO END OF DOOR
DOOR MOTOR CONTROLS
(FOR INFORMATION ONLY)
12" METAL CASED X-PROOF FLEXIBLE LEAD FOR ADJUSTMENT. LOCATE AT INSTALLATION. (FOR INFORMATION ONLY)
HOUSING COVER IN OPEN POSITION
SLIDING TANG SHROUD WELDED TO THE END OF DOOR
12 REF.
SECTION A-A
HOUSING COVER IN CLOSED POSITION
REVISION STATUS OF SHEETS
NOTES:
1. HASP SHOWN IN POSITION FOR USE WITH SLIDING DOOR LEFT TO CLOSE. THIS HASP IS REVERSIBLE FOR USE WITH SLIDING DOOR RIGHT TO CLOSE.
2. FORMERLY NAPEC DWG. 1332
3. UNLESS OTHERWISE SPECIFIED, LINEAR TOLERANCES (CASTING) PER INVESTMENT CASTING HANDBOOK, INVESTMENT CASTING INSTITUTE, SEPT. 79 (NORMAL LINEAR TOLERANCES).
4. S&G MODEL 831B OR NAPEC STYLE 3 DUAL CONTROL LOCK MAY BE USED TO SECURE THE UNIVERSAL SECURITY SYSTEM.
UNIVERSAL SECURITY SYSTEM
SLIDING DOOR
ASSEMBLY
NAVSEA 53711-5532340
SHEET 1 OF 11

REVISIONS					
ZONE	LTR.	DESCRIPTION	DATE	APPROVAL	
	A	SEE NOR 5532340 A			

ITEM	PART/MFD NO	NOMENCLATURE/DESRIPTION	QTY	NOTES	REMARKS
15		BUSHING SHIM	1		SEE SHEET 8
14		HINGE ASSEMBLY	2		SEE SHEET 9
13		HEX NUT BUSHING ASSEMBLY (INACTIVE JACK SCREW)	1		SEE DETAIL 9
12		INTRUSION SENSOR ASSEMBLY	1		SEE SHEET 9
11		ACTIVE JACK SCREW BUSHING	1		SEE DETAIL 8
10	5532348-2	ACTIVE JACK SCREW ASSEMBLY	1		
9	5532348-1	INACTIVE JACK SCREW ASSEMBLY	1		
8		PUSH BUTTON CONTROL NEMA 4 13	1		INFO. ONLY
7		1/2-13 UNC-3 EXPANSION ANCHOR	6		INFO. ONLY
6		1/2 FLAT WASHER	6		INFO. ONLY
5		1/2-13 UNC-3 HEX HD CAP SCR	6		INFO. ONLY
4		TANG AND SHROUD ASSEMBLY	1		SEE SHEET 6
3		MAIN HOUSING COVER	1		SEE DETAIL 5
2		LOCKING AND SENSOR HOUSING	1		SEE DETAIL 4
1		MAIN HOUSING BASE	1		SEE DETAIL 1

SYMBOLS: ITEM / FIELD ITEM / FIELD ASSEMBLY / FIELD PART ASSEMBLY

APPROVED 18 FEB 83

UNIVERSAL SECURITY SYSTEM

SLIDING DOOR

PARTS LIST

SCALE 1 SIZE F

2-80

DEPARTMENT OF THE NAVY
NAVAL SEA SYSTEMS COMMAND
NAVAL AVIATION PROGRAMS ENGINEERING CENTER
CHARLES, INDIANA

NAVSEA DRAWING NO. 53711-5532340

SHEET 2 OF 11

NAVSEA DRAWING NO. 53711-5532340 SHEET 2 OF 11

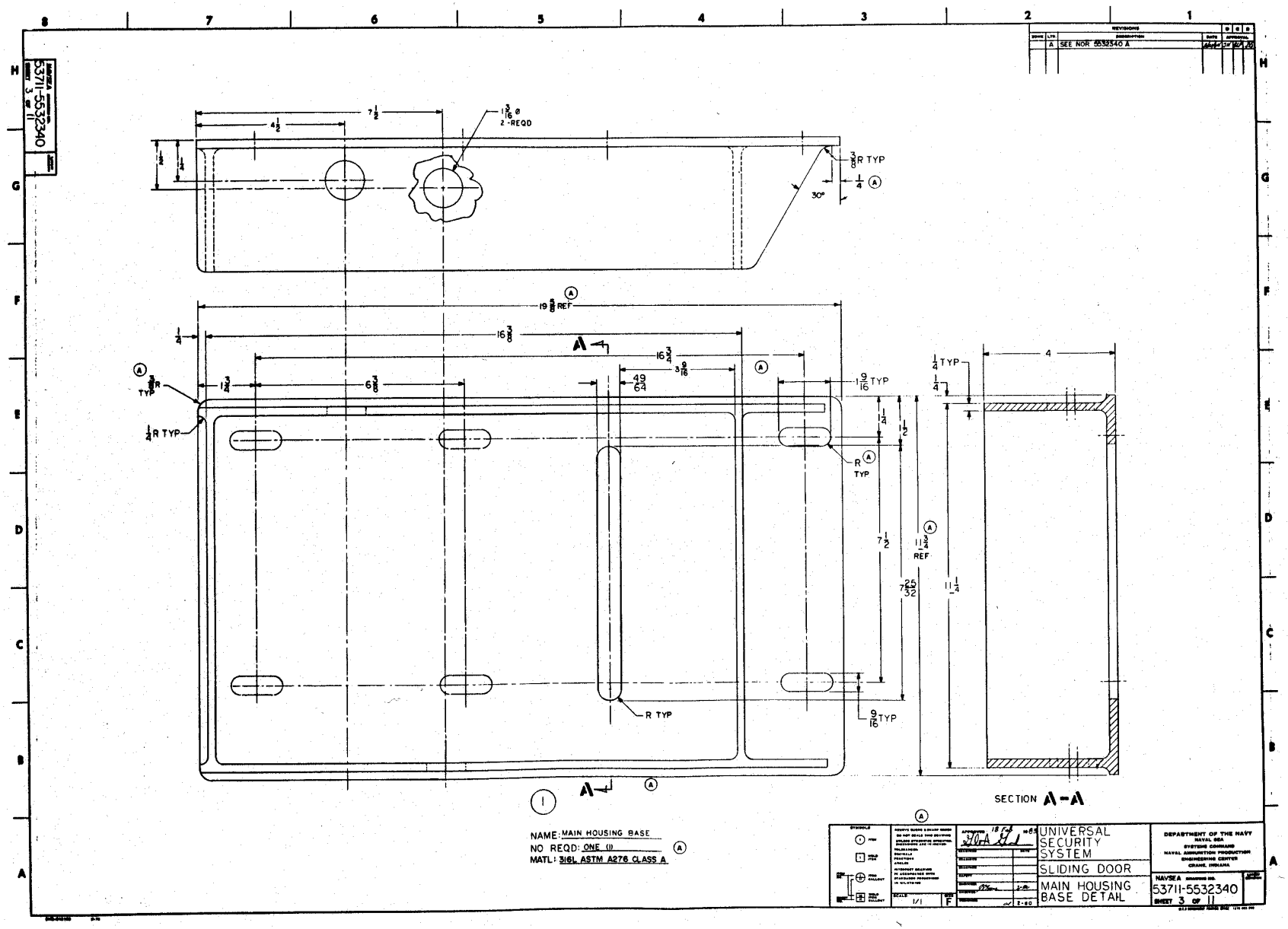
7 1/2
4 1/2
1 3/16 Ø
2 -REQD
3/8 R TYP
1/4 (A)
30°
19 3/8 REF
16 3/8
16 3/4
3 9/16
1 3/4
6 3/8
49/64
1 9/16 TYP
3/8 R TYP
1/4 R TYP
R TYP
1/4
1/2
7 1/2
11 3/4 REF
7 25/32
9/16 TYP
R TYP
1/4 TYP
1/4
4
11 1/4
SECTION A-A
NAME: MAIN HOUSING BASE
NO REQD: ONE (1)
MATL: 316L ASTM A276 CLASS A
UNIVERSAL SECURITY SYSTEM
SLIDING DOOR
MAIN HOUSING BASE DETAIL
DEPARTMENT OF THE NAVY
NAVAL SEA SYSTEMS COMMAND
NAVAL AMMUNITION PRODUCTION ENGINEERING CENTER
CRANE, INDIANA
NAVSEA 53711-5532340
SHEET 3 OF 11
SCALE 1/1
SIZE F
REVISIONS
A SEE NOR 5532340 A
53711-5532340 SHEET 3 of 11

NAVSEA 5371I-5532340 SHEET 4 OF 11

REVISIONS					
SHEET	LTR	DESCRIPTION	DATE	APPROVED	
	A	SEE NOR 5532340 A			
	B	SEE NOR 5532340 C			

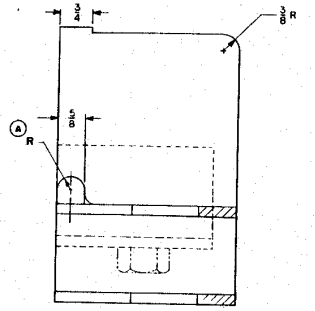

SECT A-A

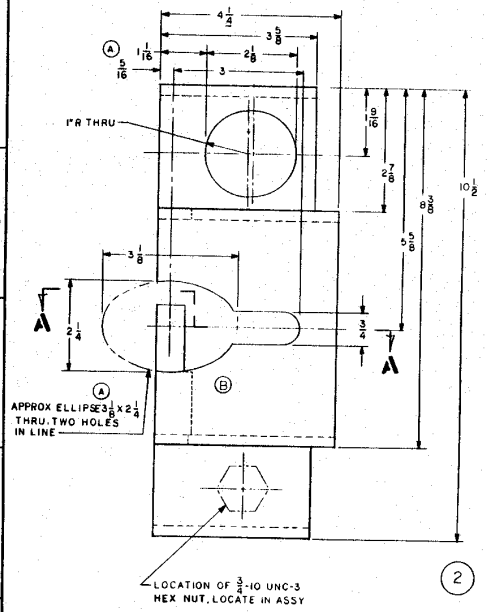

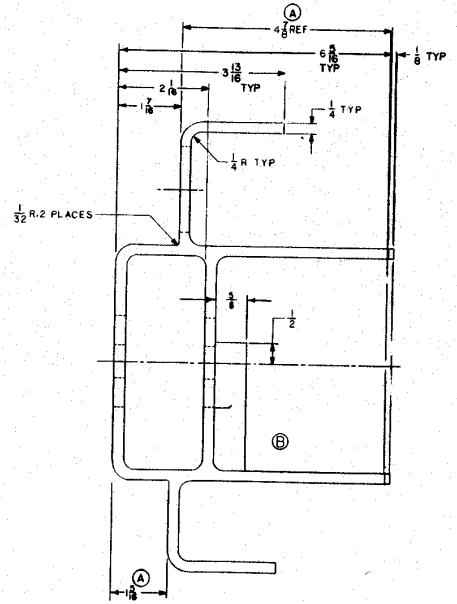

(2)

NAME LOCKING AND SENSOR HOUSING
NO REQD: ONE (1)
MATL : 316L ASTM A276 CLASS A (A)

		UNIVERSAL SECURITY SYSTEM	DEPARTMENT OF THE NAVY NAVAL SEA SYSTEMS COMMAND NAVAL ORDNANCE PRODUCTION ENGINEERING CENTER ERIE, PENNSYLVANIA
		SLIDING DOOR	NAVSEA 5371I-5532340 SHEET 4 OF 11
		LOCKING AND SENSOR HOUSING DETAIL	

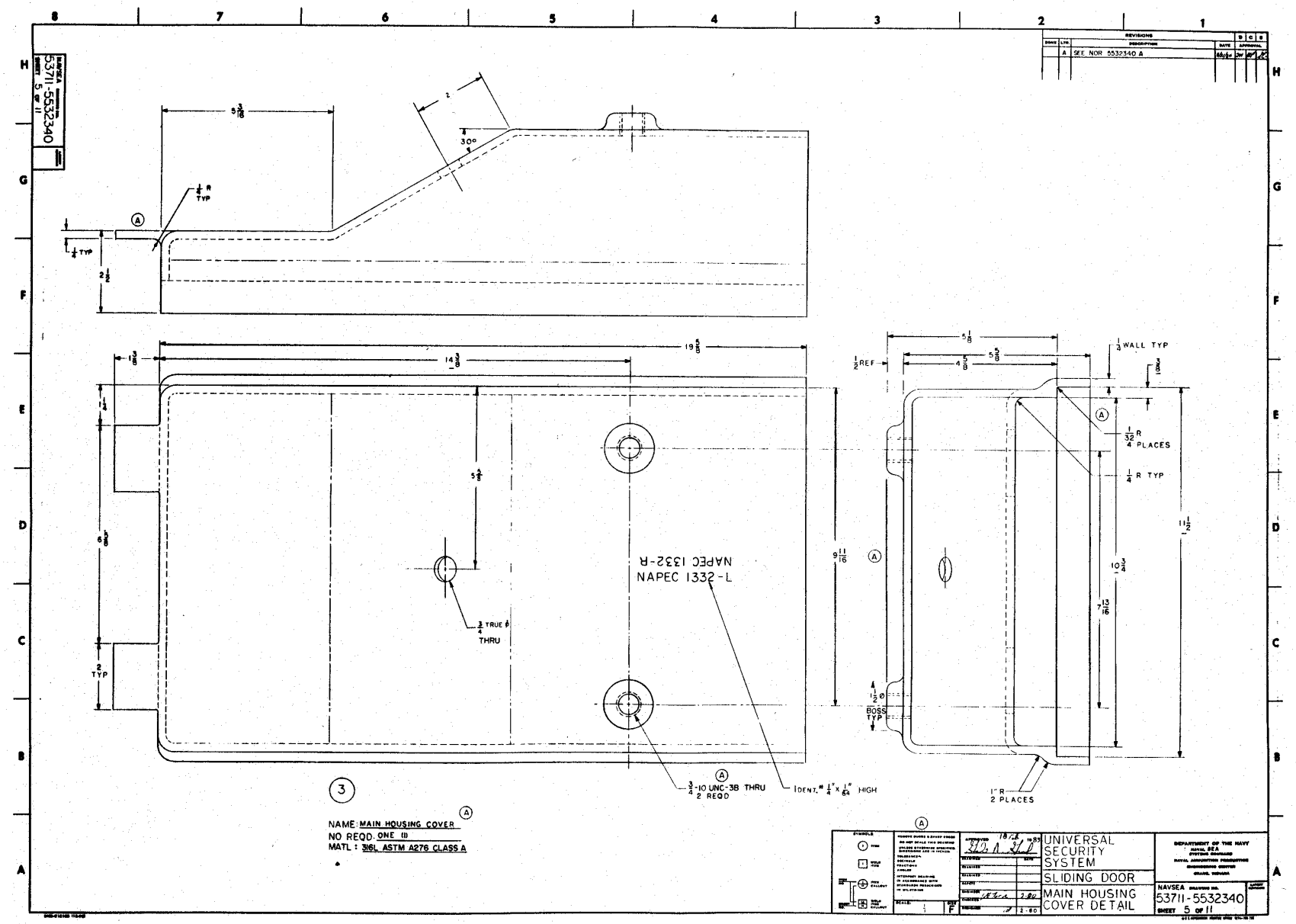

NAVSEA 53711-5532340 SHEET 5 of 11
REVISIONS
A SEE NOR 5532340 A
5 3/16
2
30°
1/4 R TYP
1/4 TYP
2 1/2
19 5/8
14 3/8
1 3/8
1 1/4
6 5/8
5 5/8
2 TYP
3/4 TRUE ø THRU
NAPEC 1332-R
NAPEC 1332-L
9 11/16
3/4-10 UNC-3B THRU 2 REQD
IDENT. # 1/4" x 1/64" HIGH
5 1/8
5 5/8
4 5/8
1/2 REF
1/4 WALL TYP
3/8
1/32 R 4 PLACES
1/4 R TYP
11 1/2
10 3/4
7 13/16
1 1/2 ø BOSS TYP
1" R 2 PLACES
3
NAME: MAIN HOUSING COVER
NO REQD. ONE (1)
MATL: 316L ASTM A276 CLASS A
UNIVERSAL SECURITY SYSTEM
SLIDING DOOR
MAIN HOUSING COVER DETAIL
DEPARTMENT OF THE NAVY
NAVAL SEA SYSTEMS COMMAND
NAVAL AMMUNITION PRODUCTION ENGINEERING CENTER
GRAND, INDIANA
NAVSEA DRAWING NO. 53711-5532340
SHEET 5 OF 11

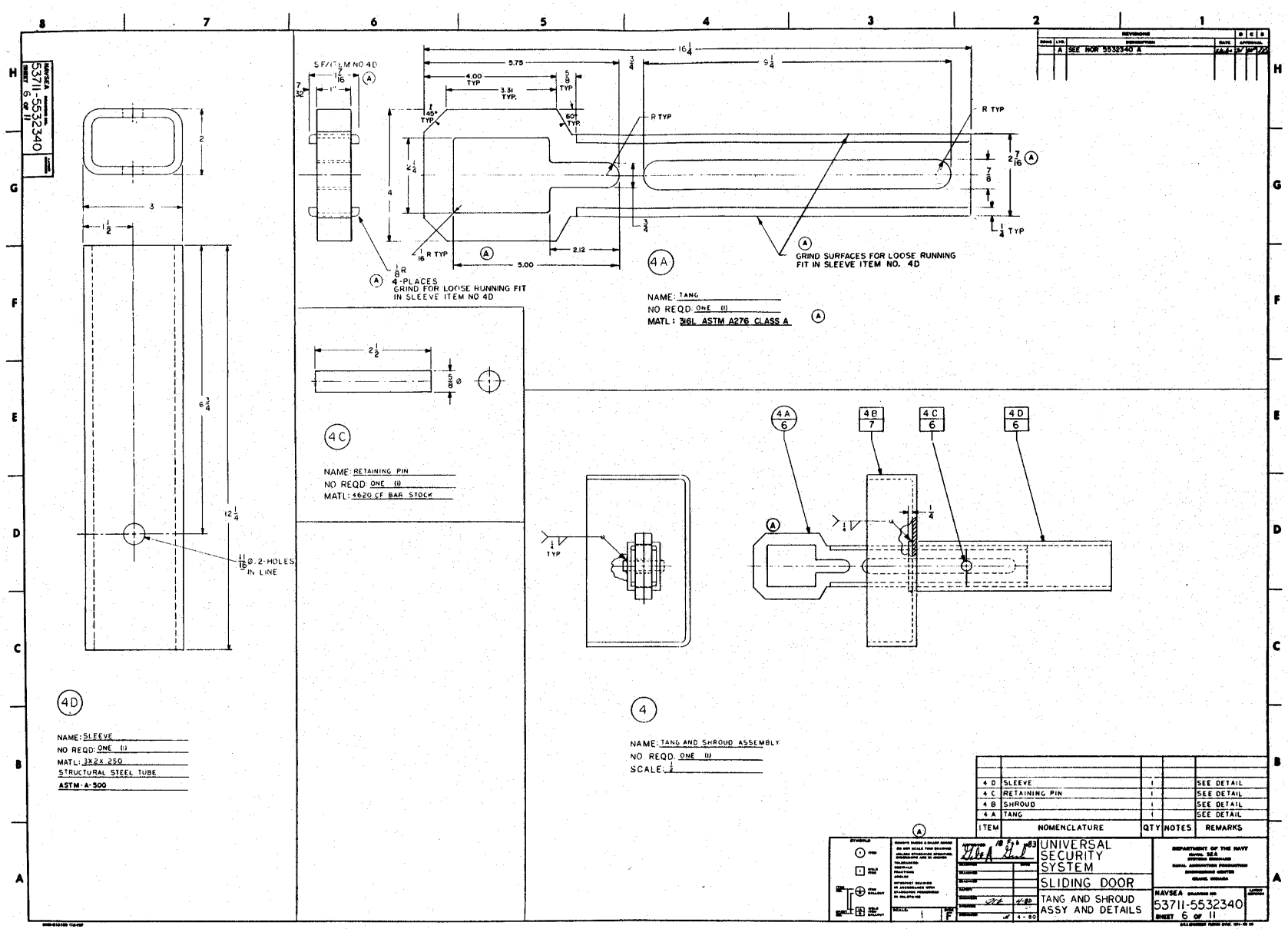

4A

NAME: TANG
NO REQD: ONE (1)
MATL: 316L ASTM A276 CLASS A

4C

NAME: RETAINING PIN
NO REQD: ONE (1)
MATL: 4620 CF BAR STOCK

4D

NAME: SLEEVE
NO REQD: ONE (1)
MATL: 3X2X.250
STRUCTURAL STEEL TUBE
ASTM-A-500

4

NAME: TANG AND SHROUD ASSEMBLY
NO REQD. ONE (1)
SCALE: 1/2

ITEM	NOMENCLATURE	QTY	NOTES	REMARKS
4 D	SLEEVE	1		SEE DETAIL
4 C	RETAINING PIN	1		SEE DETAIL
4 B	SHROUD	1		SEE DETAIL
4 A	TANG	1		SEE DETAIL

REVISIONS			
LTR	DESCRIPTION	DATE	APPROVED
A	SEE NOR 5532340 A	4-80	

UNIVERSAL SECURITY SYSTEM
SLIDING DOOR
TANG AND SHROUD ASSY AND DETAILS

DEPARTMENT OF THE NAVY
NAVAL SEA SYSTEMS COMMAND
NAVAL AVIONICS FACILITY
INDIANAPOLIS CENTER
INDIANA, INDIANA

NAVSEA 53711-5532340
SHEET 6 OF 11

53711-5532340
SHEET 6 OF 11

REVISIONS				
ZONE	LTR	DESCRIPTION	DATE	APPROVAL
	A	SEE NOR 5532340 A		

NAVSEA 53711-5532340 SHEET 7 OF 11

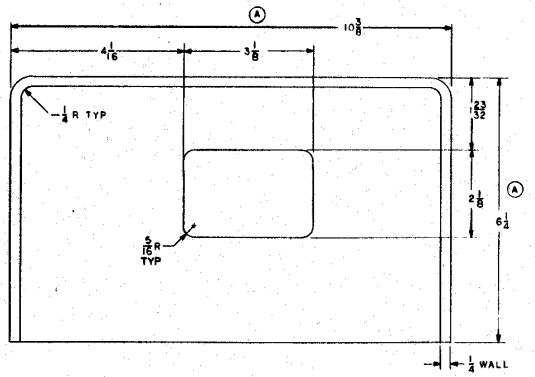

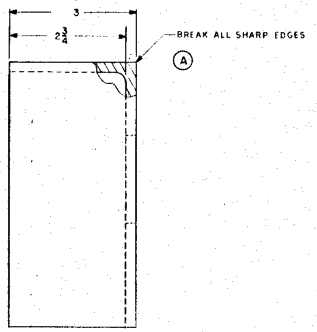

(4B)

NAME : TANG SHROUD
NO REQD : ONE (1)
MATL : 316L ASTM A276 CLASS A (A)

		UNIVERSAL SECURITY SYSTEM	DEPARTMENT OF THE NAVY NAVAL SEA SYSTEMS COMMAND NAVAL AVIATION ENGINEERING SERVICE CENTER ORANG, VIRGINIA
		SLIDING DOOR	NAVSEA DRAWING NO. 53711-5532340
		TANG SHROUD DETAIL	SHEET 7 OF 11

NAVSEA 5532340
SHEET 8 OF 11

NOTES
1. INTERPRET DRAWING IN ACCORDANCE WITH DOD STD 100.
2. REMOVE BURRS AND SHARP EDGES

ZONE	LTR	REVISIONS DESCRIPTION	DATE	D	C	B APPROVAL
	A	REPLACES 5532340 NO REVISION WITH CHANGE SEE NOR 5532340 A	[illegible]	[illegible]	[illegible]	[illegible]

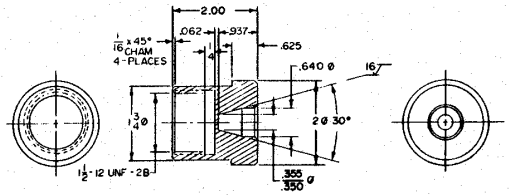

11

NAME: ACTIVE JACKSCREW BUSHING
NO REQD: ONE (1)
MATL: 316L ASTM A276 CLASS A

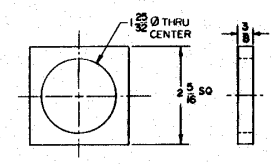

15

NAME: BUSHING SHIM (ACTIVE JACKSCREW)
NO REQD: ONE (1)
MATL: 316L ASTM A276 CLASS A

FIND NO.	QTY REQ	CODE IDENT	PART, DRAWING OR SPEC NO.	NOMENCLATURE/DESCRIPTION	REMARKS

PARTS LIST

NEXT ASSY	USED ON
APPLICATION	

SYMBOLS: ITEM; WELD ITEM; ITEM CALLOUT; WELD ITEM CALLOUT

DO NOT SCALE DRAWING
UNLESS OTHERWISE SPECIFIED, DIMENSIONS ARE IN INCHES.
TOLERANCES:
XX DECIMALS ± .01
XXX DECIMALS ± .005
FRACTIONS ± 1/64
ANGLES ± 1°
SCALE: 1/1

	INITIALS	DATE
EXAMINED		
EXAMINED		
SAFETY		
ENGINEER		
CHECKED		
DESIGNED	[illegible]	6/2/64
APPROVED	/	19

NAVAL AMMUNITION PRODUCTION ENGINEERING CENTER CRANE, IN 47522
DEPARTMENT OF THE NAVY NAVAL SEA SYSTEMS COMMAND WASHINGTON, DC 20362

UNIVERSAL SECURITY SYSTEM

SIZE	CODE IDENT NO.	NAVSEA	DWG NO.
F	53711		5532340

SHEET 8 OF 11

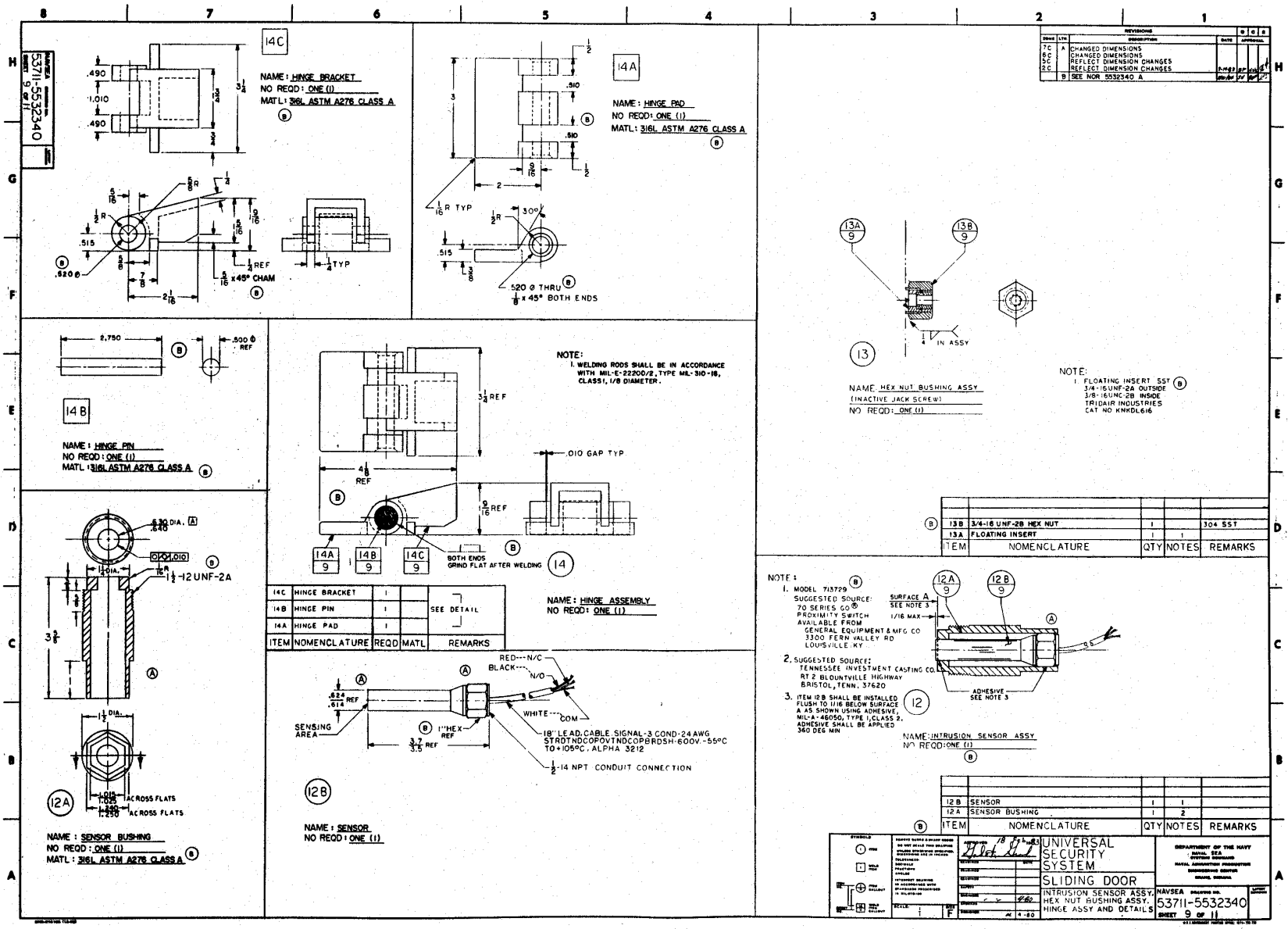

NAVSEA DRAWING NO. 53711-5532340
SHEET 9 OF 11
14C
NAME: HINGE BRACKET
NO REQD: ONE (1)
MATL: 316L ASTM A276 CLASS A
14A
NAME: HINGE PAD
NO REQD: ONE (1)
MATL: 316L ASTM A276 CLASS A
14B
NAME: HINGE PIN
NO REQD: ONE (1)
MATL: 316L ASTM A276 CLASS A
NOTE:
1. WELDING RODS SHALL BE IN ACCORDANCE WITH MIL-E-22200/2, TYPE MIL-310-16, CLASS 1, 1/8 DIAMETER.
.010 GAP TYP
BOTH ENDS GRIND FLAT AFTER WELDING
14
NAME: HINGE ASSEMBLY
NO REQD: ONE (1)
14C HINGE BRACKET 1
14B HINGE PIN 1 SEE DETAIL
14A HINGE PAD 1
ITEM NOMENCLATURE REQD MATL REMARKS
12A
NAME: SENSOR BUSHING
NO REQD: ONE (1)
MATL: 316L ASTM A276 CLASS A
RED---N/C
BLACK---N/O
WHITE---COM
SENSING AREA
18" LEAD CABLE SIGNAL-3 COND-24 AWG STRDTNDCOPOVTNDCOPBRDSH-600V.-55°C TO +105°C, ALPHA 3212
1/2-14 NPT CONDUIT CONNECTION
12B
NAME: SENSOR
NO REQD: ONE (1)
13
NAME: HEX NUT BUSHING ASSY (INACTIVE JACK SCREW)
NO REQD: ONE (1)
NOTE:
1. FLOATING INSERT SST 3/4-16UNF-2A OUTSIDE 3/8-16UNC-2B INSIDE TRIDAIR INDUSTRIES CAT NO KNKDL616
13B 3/4-16 UNF-2B HEX NUT 1 304 SST
13A FLOATING INSERT 1 1
ITEM NOMENCLATURE QTY NOTES REMARKS
NOTE:
1. MODEL 713729 SUGGESTED SOURCE: 70 SERIES GO PROXIMITY SWITCH AVAILABLE FROM GENERAL EQUIPMENT & MFG CO 3300 FERN VALLEY RD LOUISVILLE, KY
2. SUGGESTED SOURCE: TENNESSEE INVESTMENT CASTING CO. RT 2 BLOUNTVILLE HIGHWAY BRISTOL, TENN. 37620
3. ITEM 12B SHALL BE INSTALLED FLUSH TO 1/16 BELOW SURFACE A AS SHOWN USING ADHESIVE, MIL-A-46050, TYPE 1, CLASS 2. ADHESIVE SHALL BE APPLIED 360 DEG MIN
SURFACE A SEE NOTE 3
1/16 MAX
ADHESIVE SEE NOTE 3
12
NAME: INTRUSION SENSOR ASSY
NO REQD: ONE (1)
12B SENSOR 1 1
12A SENSOR BUSHING 1 2
ITEM NOMENCLATURE QTY NOTES REMARKS
UNIVERSAL SECURITY SYSTEM
SLIDING DOOR
INTRUSION SENSOR ASSY, HEX NUT BUSHING ASSY, HINGE ASSY AND DETAILS
DEPARTMENT OF THE NAVY
NAVSEA DRAWING NO. 53711-5532340
SHEET 9 OF 11

NOTES
1. INTERPRET DRAWING IN ACCORDANCE WITH DOD-STD-100.
2. REMOVE BURRS AND SHARP EDGES
3. WELDING RODS SHALL BE IN ACCORDANCE WITH MIL-E-22200/2, TYPE MIL-310-16, CLASS 1, 1/8 DIAMETER.

THIS AREA MUST BE FREE AND CLEAR OF ANY WELD SPLATTER.

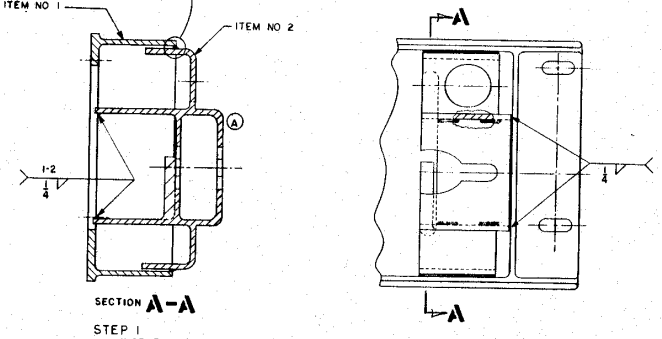

SECTION A-A

STEP 1
INSERT LOCKING AND SENSOR HOUSING, ITEM NO 2 INTO MAIN HOUSING BASE, ITEM NO 1 AND WELD IN PLACE AS SHOWN.

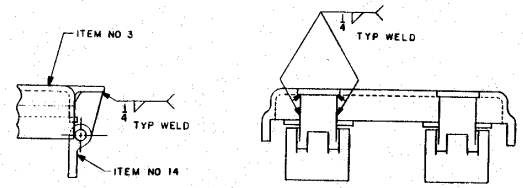

STEP 2
POSITION TWO (2) HINGE ASSEMBLIES, ITEM NO 14, AGAINST TAIL PIECES OF MAIN HOUSING COVER, ITEM NO 3. WELD IN PLACE AS SHOWN.

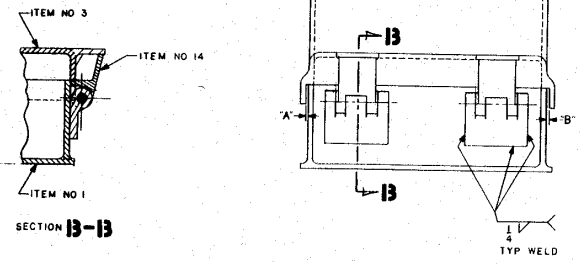

SECTION B-B

STEP 3
POSITION MAIN HOUSING ITEM NO 3 WITH HINGE ASSEMBLIES ATTACHED ONTO MAIN HOUSING BASE, ITEM NO 1, SO THAT THE INSIDE OF HOUSING COVER WALL AND OUTSIDE OF BASE WALL ARE ALIGNED IN THE AREA OF HINGES. COVER TO BE POSITIONED SO THAT THE DISTANCE "A" AND "B" SHOWN ARE RELATIVELY EQUAL. WELD HINGE ASSEMBLY, ITEM NO 14, TO MAIN HOUSING BASE, ITEM NO 1, AS SHOWN.

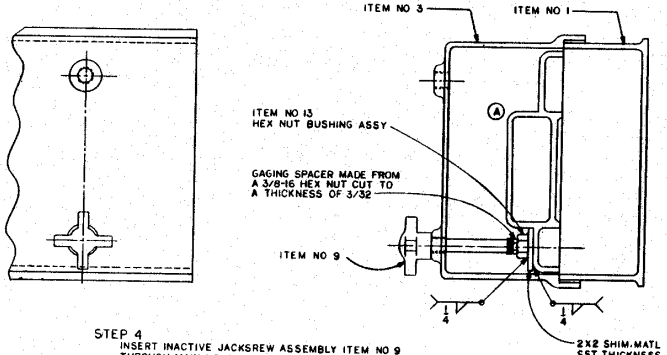

STEP 4
INSERT INACTIVE JACKSREW ASSEMBLY ITEM NO 9 THROUGH MAIN HOUSING COVER, ITEM NO 3. THEAD GAGING SPACER ONTO INACTIVE JACKSCREW AS FAR AS POSSIBLE AND THREAD INACTIVE JACKSCREW NUT, ITEM NO 13, AGAINST GAGING SPACER.

DETERMINE THICKNESS OF SHIM MATERIAL REQUIRED BETWEEN LOCKING AND SENSOR HOUSING, ITEM NO 2, AND INACTIVE JACKSCREW NUT. TACK WELD SHIM AND NUT TO MAINTAIN POSITION. OPEN MAIN HOUSING COVER AND FINISH WELDS AS SHOWN. REMOVE SPACER AND SAVE FOR NEXT LOCKING SYSTEM.

REVISIONS				
ZONE	LTR	DESCRIPTION	DATE	APPROVAL
	A	SEE NOR 5532340 A		

FIND NO.	QTY REQ	CODE IDENT	PART, DRAWING OR SPEC NO.	NOMENCLATURE/DESCRIPTION	REMARKS

PARTS LIST

NEXT ASSY | USED ON
APPLICATION

DO NOT SCALE DRAWING
UNLESS OTHERWISE SPECIFIED, DIMENSIONS ARE IN INCHES
TOLERANCES:
XX DECIMALS ±
XXX DECIMALS ±
FRACTIONS ±
ANGLES ±
SCALE:

	INITIALS	DATE
EXAMINED		
EXAMINED		
SAFETY		
ENGINEER		
CHECKED		
DESIGNED		9-80

APPROVED

NAVAL AMMUNITION PRODUCTION ENGINEERING CENTER, CRANE, IN 47522
DEPARTMENT OF THE NAVY, NAVAL SEA SYSTEMS COMMAND, WASHINGTON, DC 20362

UNIVERSAL SECURITY SYSTEM
SLIDING DOOR
HOUSING, TANG AND SHROUD ASSY

SIZE F | CODE IDENT NO. 53711 | NAVSEA DWG NO. 5532340
SHEET 10 OF 11

5532340 REV A
SHEET 10 OF 11

REVISIONS				
ZONE	LTR	DESCRIPTION	DATE	APPROVAL
	A	SEE NOR 5532340 A	4/16/84	JW

SHEET 5371I-5532340 11 OF 11

NOTES
1. INTERPRET DRAWING IN ACCORDANCE WITH DOD STD 100.
2. REMOVE BURRS AND SHARP EDGES
3. WELDING RODS SHALL BE IN ACCORDANCE WITH MIL-E-22200/3, TYPE MIL-310-16, CLASS I, 1/8 DIAMETER. (A)

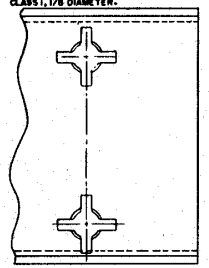

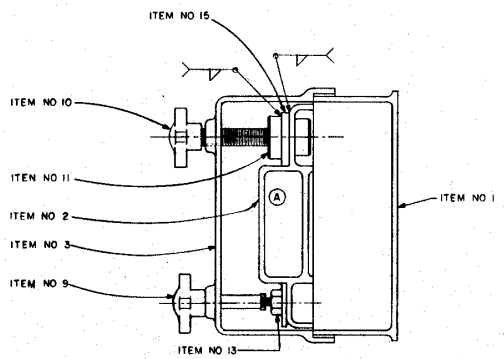

STEP 5
THREAD ACTIVE JACKSCREW ASSEMBLY, ITEM NO 10 THROUGH MAIN HOUSING COVER ITEM NO 3. LOCATE BUSHING SHIM, ITEM NO 15, AND SENSOR BUSHING, ITEM NO 11, SO THAT ACTIVE JACKSCREW WILL ALIGN THEM CORRECTLY IN THE HOLE CAST IN LOCKING AND SENSOR HOUSING, ITEM NO 2.

LOCK THE MAIN HOUSING COVER SECURELY AGAINST THE MAIN HOUSING BASE, ITEM NO 1, BY THREADING INACTIVE JACKSCREW, ITEM NO 9, INTO INACTIVE JACKSCREW NUT, ITEM NO 13, UNTIL HAND-TIGHT. TACKWELD ITEMS 11 AND 15 TO ITEM NO 2 IF ALIGNMENT OF ITEM ON 11 AND 15 ARE SATISFACTORY. OPEN COVER AND FINISH WELDS.

STEP 6
FABRICATE SLEEVE ITEM 4D INCLUDING CUTTING TO LENGTH AND DRILLING RETAINING PIN HOLE ACCORDING TO SHEET 6.

STEP 7
FABRICATE RETAINING PIN ACCORDING TO SHEET 6.

INSERT SLEEVE ITEM 4D THROUGH HOLE IN SHROUD ITEM 4B AND WELD ACCORDING TO SHEET 6.

STEP 8
INSERT TANG ITEM 4A INTO SLEEVE ITEM 4D AS SHOWN ON SHEET 6. GRIND TANG AS REQUIRED TO ALLOW LOOSE RUNNING FIT. (A)

STEP 9
INSERT RETAINING PIN ITEM 4C THROUGH HOLE IN SLEEVE ITEM 4D AND THROUGH SLOT IN TANG ITEM 4A AS SHOWN ON SHEET 6.
WELD PIN TO SLEEVE AT BOTH ENDS.

FIND NO.	QTY REQ	CODE IDENT	PART, DRAWING OR SPEC NO.	NOMENCLATURE/DESCRIPTION	REMARKS

PARTS LIST

NEXT ASSY	USED ON	APPLICATION	SYMBOLS: (A) ITEM; (B) WELD ITEM; (C) ITEM CALLOUT; (D) WELD ITEM CALLOUT	DO NOT SCALE DRAWING. UNLESS OTHERWISE SPECIFIED, DIMENSIONS ARE IN INCHES. TOLERANCES: XX DECIMALS ±; XXX DECIMALS ±; FRACTIONS ±; ANGLES ±. SCALE: —	EXAMINED; EXAMINED; SAFETY; ENGINEER; CHECKED; RELEASED 9-80; APPROVED 18 JAN 1983	INITIALS; DATE

NAVAL AMMUNITION PRODUCTION ENGINEERING CENTER, CRANE, IN 47522
DEPARTMENT OF THE NAVY, NAVAL SEA SYSTEMS COMMAND, WASHINGTON, DC 20362

UNIVERSAL SECURITY SYSTEM
SLIDING DOOR
HOUSING, TANG AND SHROUD ASSY

SIZE	CODE IDENT NO.	NAVSEA	DWG NO.
F	53711		5532340

SHEET 11 OF 11

NOTES
1. INTERPRET DRAWING IN ACCORDANCE WITH DOD-STD-100.
2. REMOVE BURRS AND SHARP EDGES
3. USE WELDING ROD 310-16 3/32 DIA.

REVISIONS						
ZONE	LTR	DESCRIPTION	DATE	APPROVAL		
	A	SEE NOR 5532345 A	5/16/85	[illegible]		

A	A	A
1	2	3
REVISION STATUS OF SHEETS		

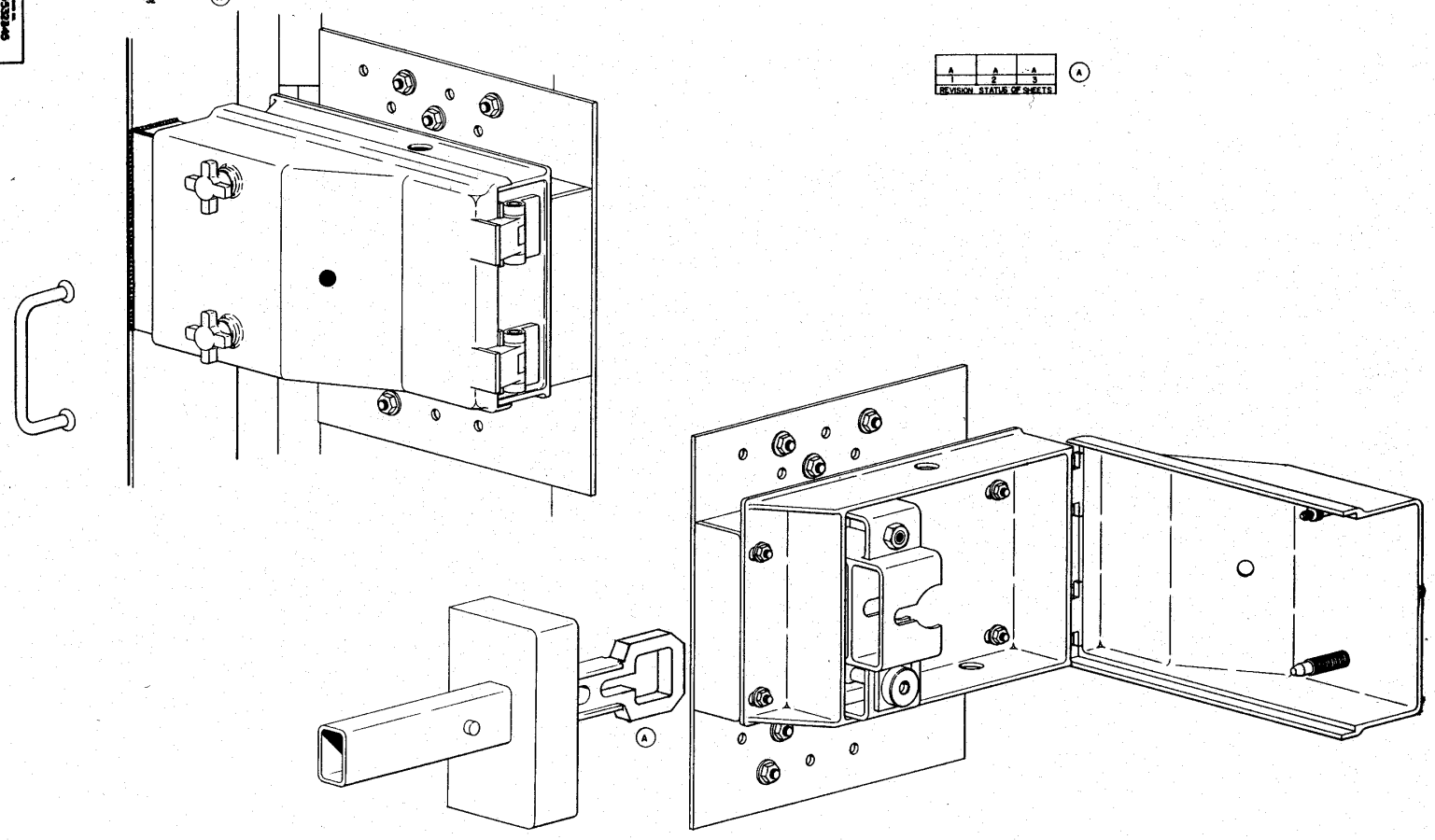

FIND NO.	QTY REQ	CODE IDENT	PART, DRAWING OR SPEC NO.	NOMENCLATURE/DESCRIPTION	REMARKS

PARTS LIST

NEXT ASSY	USED ON
APPLICATION	

SYMBOLS: ITEM; WELD ITEM; ITEM CALLOUT; WELD ITEM CALLOUT

DO NOT SCALE DRAWING
UNLESS OTHERWISE SPECIFIED DIMENSIONS ARE IN INCHES.
TOLERANCES:
XX DECIMALS ±
XXX DECIMALS ±
FRACTIONS ±
ANGLES ±
SCALE:

	INITIALS	DATE
EXAMINED		
EXAMINED		
SAFETY		
ENGINEER		
CHECKED		
DESIGNER		
APPROVED	[illegible]	26 1981

NAVAL AMMUNITION PRODUCTION ENGINEERING CENTER CRANE, IN 47522

DEPARTMENT OF THE NAVY NAVAL SEA SYSTEMS COMMAND WASHINGTON, DC 20362

UNIVERSAL SECURITY SYSTEM
Sliding Door Installation Procedures

OVAL ARCH MAGAZINE

SIZE F | CODE IDENT NO. 63711 | NAVSEA DWG NO. 5532345

SHEET 1 OF 3

ZONE	LTR	REVISIONS DESCRIPTION	DATE	APPROVAL
	A	SEE NOR 5532345 A	3/4/85	

NAVSEA 5532345
SHEET 2 OF 3

NOTES:
1. INTERPRET DRAWING IN ACCORDANCE WITH DOD-STD-100.
2. REMOVE BURRS AND SHARP EDGES
3. USE WELDING ROD SO-16, 3/32 DIA. (A)

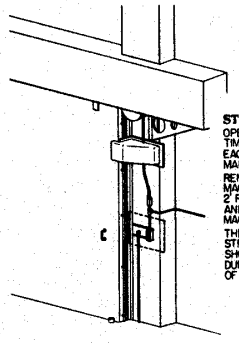

STEP 1
OPEN AND CLOSE MAGAZINE DOOR SEVERAL TIMES NOTING THE POSITION OF THE DOOR EACH TIME IT STOPS IN THE CLOSED POSITION. MARK THIS POSITION ON THE HEADWALL.
REMOVE ANY OBSTRUCTIONS FROM THE MAGAZINE HEADWALL IN AREA APPROXIMATELY 2' RIGHT OF THE DOOR (IN CLOSED POSITION) AND AT A HEIGHT 3' TO 5' ABOVE THE MAGAZINE APRON.
THE DOOR EMERGENCY STOP ACTUATOR STRIP LOCATED ON THE END OF THE DOOR SHOULD BE REMOVED TO PREVENT DAMAGE DURING THE CUTTING AND WELDING PHASES OF THE INSTALLATION.

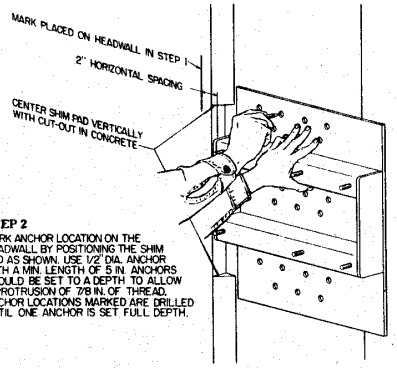

STEP 2
MARK ANCHOR LOCATION ON THE HEADWALL BY POSITIONING THE SHIM PAD AS SHOWN. USE 1/2" DIA. ANCHOR WITH A MIN. LENGTH OF 5 IN. ANCHORS SHOULD BE SET TO A DEPTH TO ALLOW A PROTRUSION OF 7/8 IN. OF THREAD. ANCHOR LOCATIONS MARKED ARE DRILLED UNTIL ONE ANCHOR IS SET FULL DEPTH.

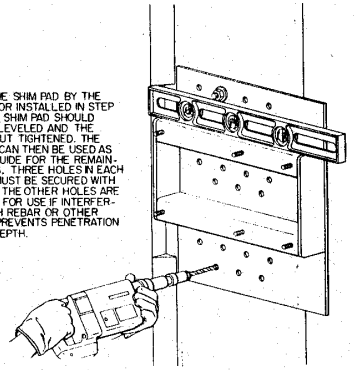

STEP 3
ATTACH THE SHIM PAD BY THE ONE ANCHOR INSTALLED IN STEP NO. 2. THE SHIM PAD SHOULD THEN BE LEVELED AND THE ANCHOR NUT TIGHTENED. THE SHIM PAD CAN THEN BE USED AS A DRILL GUIDE FOR THE REMAINING HOLES. THREE HOLES IN EACH SECTION MUST BE SECURED WITH ANCHORS, THE OTHER HOLES ARE PROVIDED FOR USE IF INTERFERENCE WITH REBAR OR OTHER OBJECTS PREVENTS PENETRATION TO FULL DEPTH.

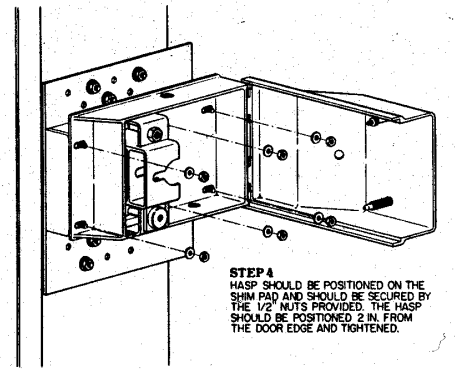

STEP 4
HASP SHOULD BE POSITIONED ON THE SHIM PAD AND SHOULD BE SECURED BY THE 1/2" NUTS PROVIDED. THE HASP SHOULD BE POSITIONED 2 IN. FROM THE DOOR EDGE AND TIGHTENED.

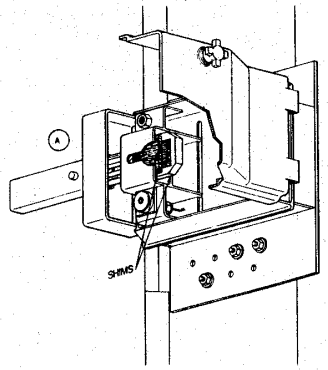

STEP 5
THE TANG AND SHROUD ASSEMBLY SHOULD THEN BE INSERTED INTO THE LOCK HOUSING AND THE TANG SHIMMED IN THE CENTER OF THE LOCK HOUSING.

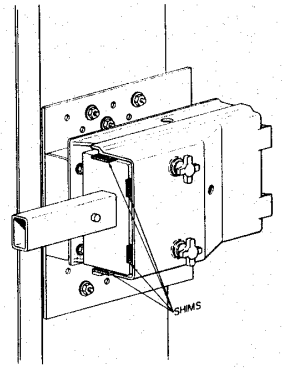

STEP 6
CLOSE COVER AND FASTEN SECURELY USING TWO JACKSCREWS.
INSERT WOODEN SHIM BETWEEN THE SHROUD AND THE COVER AS SHOWN TO CENTER THE SHROUD ASSEMBLY.

FIND NO.	QTY REQ	CODE IDENT	PART, DRAWING OR SPEC NO.	NOMENCLATURE/DESCRIPTION	REMARKS

PARTS LIST

NEXT ASSY	USED ON
APPLICATION	

SYMBOLS: ITEM; WELD ITEM; ITEM CALLOUT; WELD ITEM CALLOUT

DO NOT SCALE DRAWING
UNLESS OTHERWISE SPECIFIED, DIMENSIONS ARE IN INCHES
TOLERANCES: XX DECIMALS ±; XXX DECIMALS ±; FRACTIONS ±; ANGLES ±
SCALE

	INITIALS	DATE
EXAMINED		
EXAMINED		
SAFETY		
ENGINEER		
CHECKED		
DESIGNED DRAWN		

APPROVED 8-30-85 18 81

NAVAL AMMUNITION PRODUCTION ENGINEERING CENTER CRANE IN 47522
DEPARTMENT OF THE NAVY NAVAL SEA SYSTEMS COMMAND WASHINGTON, DC 20362

UNIVERSAL SECURITY SYSTEM
Sliding Door Installation Procedures

OVAL ARCH MAGAZINE

SIZE F | CODE IDENT NO. 53711 | NAVSEA DWG NO 5532345
SHEET 2 OF 3

REVISIONS					
ZONE	LTR	DESCRIPTION	DATE	APPROVAL	
	A	SEE NOR 5532345 A	1/6/85		

NAVSEA 5532345
SHEET 3 OF 3

NOTES
1. INTERPRET DRAWING IN ACCORDANCE WITH DOD-STD-100.
2. REMOVE BURRS AND SHARP EDGES
3. USE WELDING ROD 310-16, 3/32 DIA. (A)

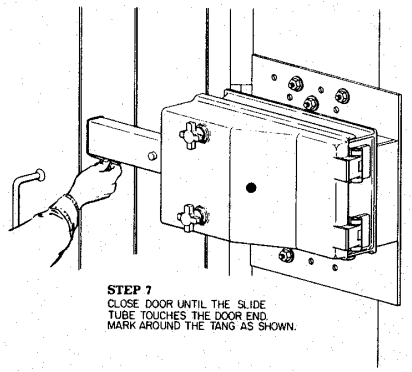

STEP 7
CLOSE DOOR UNTIL THE SLIDE TUBE TOUCHES THE DOOR END. MARK AROUND THE TANG AS SHOWN.

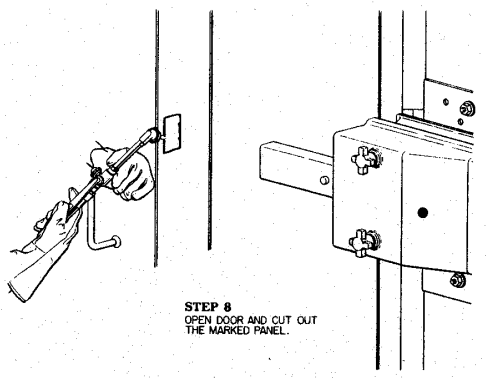

STEP 8
OPEN DOOR AND CUT OUT THE MARKED PANEL.

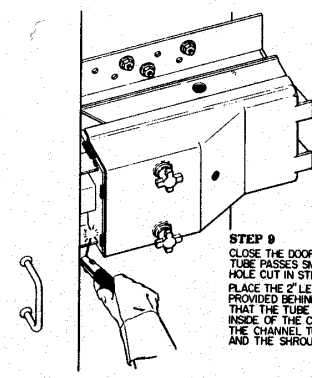

STEP 9
CLOSE THE DOOR UNTIL THE PROTRUDING TUBE PASSES SMOOTHLY THROUGH THE HOLE CUT IN STEP 8.
PLACE THE 2" LENGTH OF 10" CHANNEL PROVIDED BEHIND THE TANG TUBE SO THAT THE TUBE IS CENTERED IN THE INSIDE OF THE CHANNEL. TACK WELD THE CHANNEL TO BOTH THE DOOR END AND THE SHROUD.

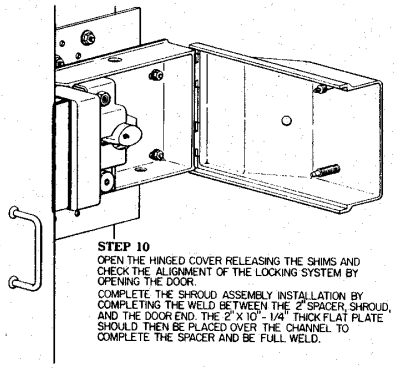

STEP 10
OPEN THE HINGED COVER RELEASING THE SHIMS AND CHECK THE ALIGNMENT OF THE LOCKING SYSTEM BY OPENING THE DOOR.
COMPLETE THE SHROUD ASSEMBLY INSTALLATION BY COMPLETING THE WELD BETWEEN THE 2" SPACER, SHROUD, AND THE DOOR END. THE 2" X 10" - 1/4" THICK FLAT PLATE SHOULD THEN BE PLACED OVER THE CHANNEL TO COMPLETE THE SPACER AND BE FULL WELD.

STEP 11
THE HASP SHOULD THEN BE WELDED TO THE SHIM PAD. 1 - 4 1/4 IN. FILLET WELDS SHOULD BE PLACED ALONG THE TOP AND BOTTOM OF THE SHIM PAD TUBES.

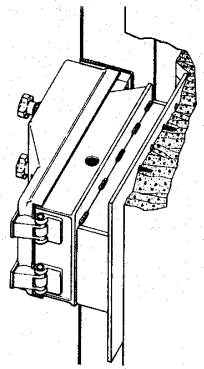

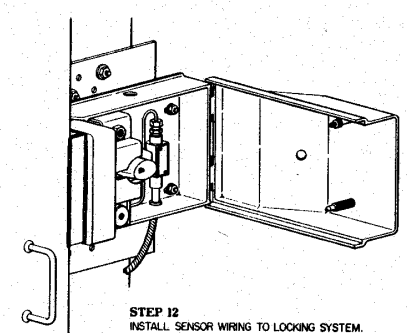

STEP 12
INSTALL SENSOR WIRING TO LOCKING SYSTEM.

FIND NO.	QTY REQ	CODE IDENT	PART, DRAWING OR SPEC NO.	NOMENCLATURE/DESCRIPTION	REMARKS

PARTS LIST

NEXT ASSY	USED ON
APPLICATION	

SYMBOLS: ITEM; WELD ITEM; ITEM NO.; ITEM CALLOUT; SHEET NO.; WELD ITEM CALLOUT

DO NOT SCALE DRAWING
UNLESS OTHERWISE SPECIFIED DIMENSIONS ARE IN INCHES.
TOLERANCES:
XX DECIMALS ±
XXX DECIMALS ±
FRACTIONS ±
ANGLES ±
SCALE:

	INITIALS	DATE
EXAMINED		
EXAMINED		
SAFETY		
ENGINEER		
CHECKED		
DESIGNED		

APPROVED 1/7/85 19 [illegible]

NAVAL AMMUNITION PRODUCTION ENGINEERING CENTER CRANE, IN 47522
DEPARTMENT OF THE NAVY NAVAL SEA SYSTEMS COMMAND WASHINGTON DC 20362

UNIVERSAL SECURITY SYSTEM
Sliding Door Installation Procedures

OVAL ARCH MAGAZINE

SIZE F | CODE IDENT NO. 53711 | NAVSEA DWG NO. 5532345
SHEET 3 OF 3

REVISION STATUS OF SHEETS			
SHEET NO	1	2	3
REVISION	A	B	A

REVISIONS						
ZONE	LTR	DESCRIPTION	DATE	APPROVAL		
C5	A	CHANGED TANG	5/22/84			

NAVSEA 5532346 SHEET 1 OF 3

NOTES
1. INTERPRET DRAWING IN ACCORDANCE WITH DOD-STD-100.
2. REMOVE BURRS AND SHARP EDGES
3. S&G MODEL 831B OR NAPEC STYLE 3 DUAL CONTROL LOCK MAY BE USED TO SECURE THE UNIVERSAL SECURITY SYSTEM.

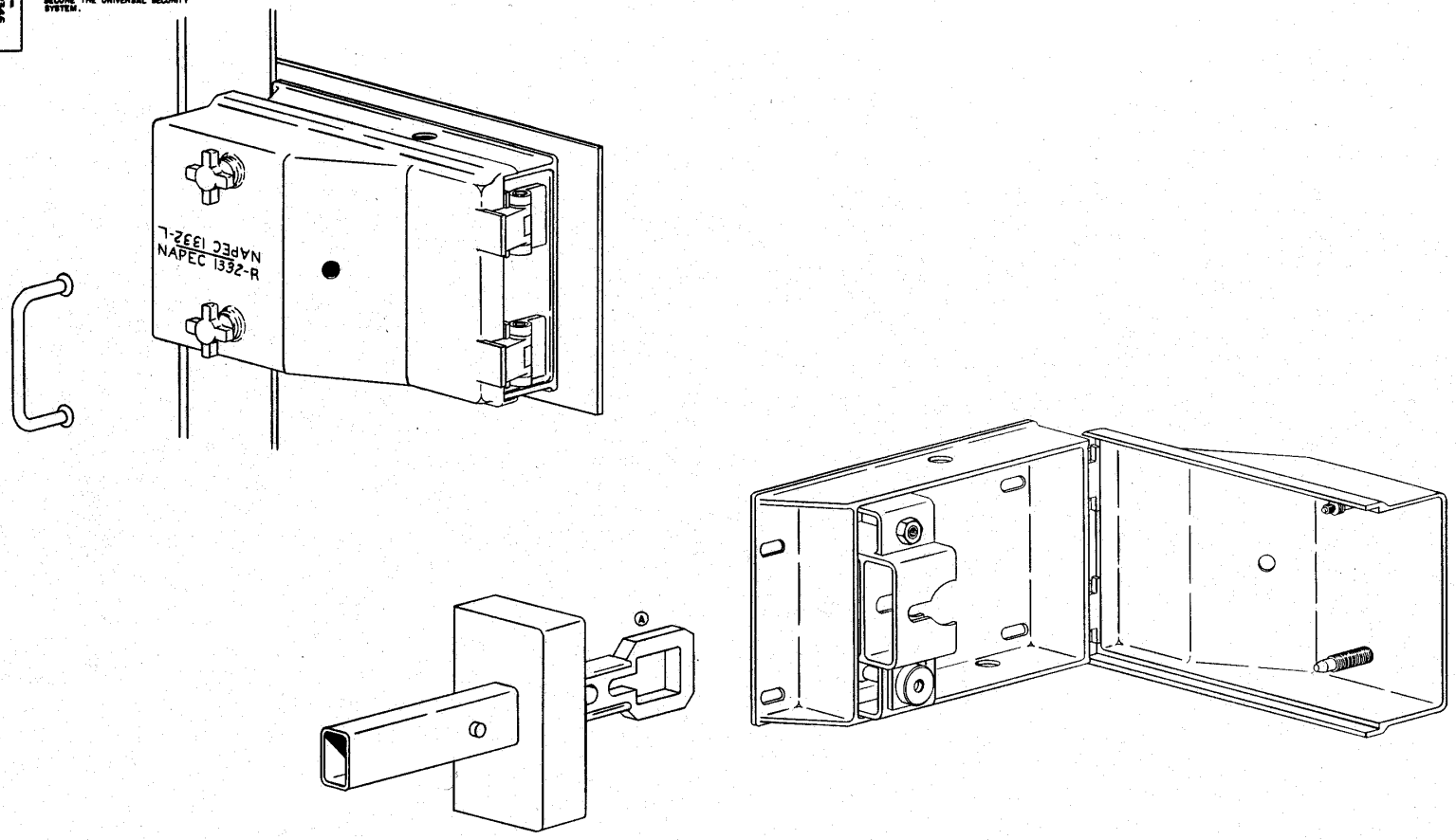

FIND NO.	QTY REQ	CODE IDENT	PART, DRAWING OR SPEC NO.	NOMENCLATURE/DESCRIPTION	REMARKS

PARTS LIST

NEXT ASSY	USED ON
APPLICATION	

SYMBOLS: ITEM; WELD ITEM; ITEM CALLOUT; WELD ITEM CALLOUT

DO NOT SCALE DRAWING
UNLESS OTHERWISE SPECIFIED, DIMENSIONS ARE IN INCHES
TOLERANCES
XX DECIMALS ±
XXX DECIMALS ±
FRACTIONS ±
ANGLES ±

SCALE: NOTE

	INITIALS	DATE
EXAMINED		
EXAMINED		
SAFETY		
ENGINEER		
CHECKED		
DESIGNED DRAWN		
APPROVED		

NAVAL AMMUNITION PRODUCTION ENGINEERING CENTER CRANE, IN 47522

DEPARTMENT OF THE NAVY NAVAL SEA SYSTEMS COMMAND WASHINGTON, DC 20362

UNIVERSAL SECURITY SYSTEM
INSTALLATION PROCEDURE FOR
SLIDING DOOR; RIGHT-SIDE MOUNT

SIZE	CODE IDENT NO.	NAVSEA DWG NO.
F	53711	5532346

SHEET 1 OF 3

NOTES
1. INTERPRET DRAWING IN ACCORDANCE WITH DOD-STD-100.
2. REMOVE BURRS AND SHARP EDGES

NAVSEA DWG NO. 5532346
SHEET 2 OF 3

REVISIONS						
ZONE	LTR	DESCRIPTION	DATE	APPROVAL		
F2	A	CHANGED TANG				
	B	SEE NOR 5532346 B				

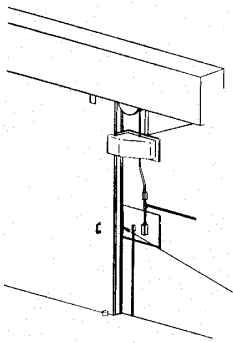

STEP 1
OPEN AND CLOSE MAGAZINE DOOR SEVERAL TIMES NOTING POSITION OF DOOR EACH TIME IT STOPS IN CLOSED POSITION. MARK THIS POSITION ON HEADWALL. REMOVE ANY OBSTRUCTIONS FROM MAGAZINE HEADWALL IN AREA APPROXIMATELY 2' RIGHT OF DOOR (IN CLOSED POSITION) AND AT A HEIGHT 3' TO 5' ABOVE MAGAZINE APRON.

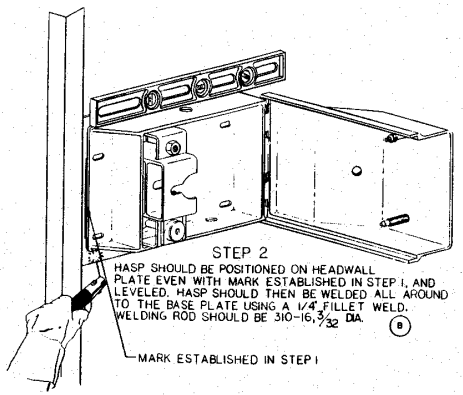

STEP 2
HASP SHOULD BE POSITIONED ON HEADWALL PLATE EVEN WITH MARK ESTABLISHED IN STEP 1, AND LEVELED. HASP SHOULD THEN BE WELDED ALL AROUND TO THE BASE PLATE USING A 1/4" FILLET WELD. WELDING ROD SHOULD BE 310-16, 3/32 DIA. (B)

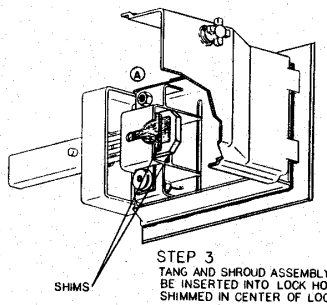

STEP 3
TANG AND SHROUD ASSEMBLY SHOULD THEN BE INSERTED INTO LOCK HOUSING AND TANG SHIMMED IN CENTER OF LOCK HOUSING.

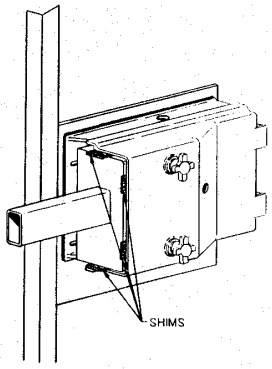

STEP 4
CLOSE COVER AND FASTEN SECURELY USING TWO JACKSCREWS. INSERT WOODEN SHIM BETWEEN SHROUD AND COVER AS SHOWN TO CENTER SHROUD ASSEMBLY.

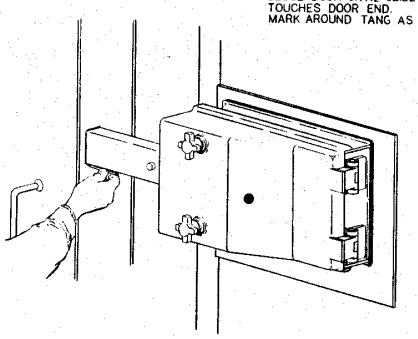

STEP 5
CLOSE DOOR UNTIL SLIDE TUBE TOUCHES DOOR END. MARK AROUND TANG AS SHOWN.

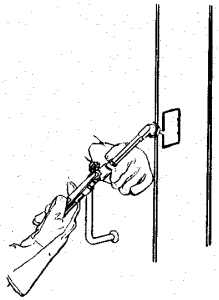

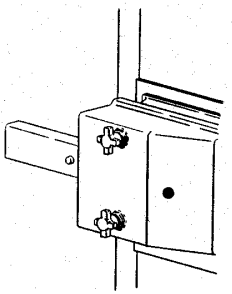

STEP 6
OPEN DOOR AND CUT OUT MARKED PANEL.

FIND NO.	QTY REQ	CODE IDENT	PART, DRAWING OR SPEC NO.	NOMENCLATURE/DESCRIPTION	REMARKS

PARTS LIST

NAVAL AMMUNITION PRODUCTION ENGINEERING CENTER CRANE, IN 47522	DEPARTMENT OF THE NAVY NAVAL SEA SYSTEMS COMMAND WASHINGTON, DC 20362

UNIVERSAL SECURITY SYSTEM INSTALLATION PROCEDURE FOR SLIDING DOOR; RIGHT-SIDE MOUNT

SYMBOLS: ITEM; WELD ITEM; ITEM CALLOUT; WELD ITEM CALLOUT

DO NOT SCALE DRAWING
UNLESS OTHERWISE SPECIFIED, DIMENSIONS ARE IN INCHES
TOLERANCES: XX DECIMALS ±; XXX DECIMALS ±; FRACTIONS ±; ANGLES ±

SCALE NONE

	INITIALS	DATE
EXAMINED		
EXAMINED		
SAFETY		
ENGINEER		
CHECKED		
APPROVED		

APPROVED MAR 6 1983

NEXT ASSY | USED ON
APPLICATION

SIZE F | CODE IDENT NO. 53711 | NAVSEA DWG NO. 5532346
SHEET 2 OF 3

NAVSEA 5532346
SHEET 3 OF 3

NOTES
1. INTERPRET DRAWING IN ACCORDANCE WITH DOD-STD-100.
2. REMOVE BURRS AND SHARP EDGES

REVISIONS				D	C	S
ZONE	LTR	DESCRIPTION	DATE	APPROVAL		
F7		CHANGED TANG				
F4	A	CHANGED TANG and LOCK	[illegible]	[illegible]	[illegible]	[illegible]

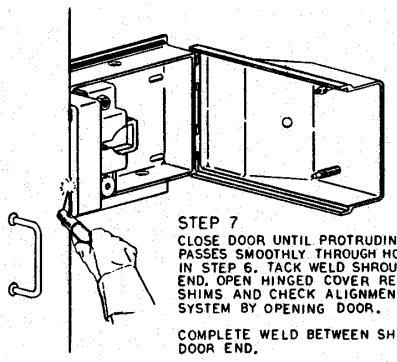

STEP 7
CLOSE DOOR UNTIL PROTRUDING TUBE PASSES SMOOTHLY THROUGH HOLE CUT IN STEP 6. TACK WELD SHROUD TO DOOR END. OPEN HINGED COVER RELEASING SHIMS AND CHECK ALIGNMENT OF SYSTEM BY OPENING DOOR.

COMPLETE WELD BETWEEN SHROUD AND DOOR END.

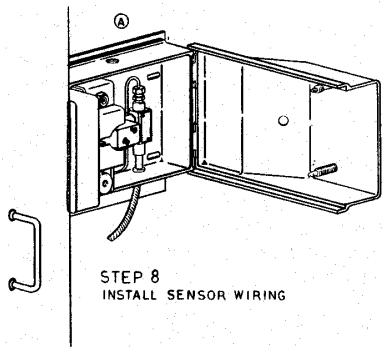

STEP 8
INSTALL SENSOR WIRING

FIND NO.	QTY REQ	CODE IDENT	PART, DRAWING OR SPEC NO.	NOMENCLATURE/DESCRIPTION	REMARKS

PARTS LIST

NEXT ASSY	USED ON
APPLICATION	

SYMBOLS: ITEM; WELD ITEM; ITEM CALLOUT; WELD ITEM CALLOUT

DO NOT SCALE DRAWING
UNLESS OTHERWISE SPECIFIED DIMENSIONS ARE IN INCHES
TOLERANCES
XX DECIMALS ±
XXX DECIMALS ±
FRACTIONS ±
ANGLES ±

SCALE: NONE

	INITIALS	DATE
EXAMINED		
EXAMINED		
SAFETY		
ENGINEER		
CHECKED		
DESIGNED DRAWN		

APPROVED [illegible] 1983

NAVAL AMMUNITION PRODUCTION ENGINEERING CENTER CRANE, IN 47522

DEPARTMENT OF THE NAVY NAVAL SEA SYSTEMS COMMAND WASHINGTON, DC 20362

UNIVERSAL SECURITY SYSTEM
INSTALLATION PROCEDURE FOR
SLIDING DOOR; RIGHT-SIDE MOUNT

SIZE F | CODE IDENT NO. 53711 | NAVSEA DWG NO. 5532346

SHEET 3 OF 3

NAVSEA DRAWING NO. 5532347
SHEET 1 OF 3

NOTES
1. INTERPRET DRAWING IN ACCORDANCE WITH DOD-STD-100.
2. REMOVE BURRS AND SHARP EDGES
3. S&G MODEL 831B OR NAPEC STYLE 3 DUAL CONTROL LOCK MAY BE USED TO SECURE THE UNIVERSAL SECURITY SYSTEM.

REVISION STATUS OF SHEETS			
SHEET NO.	1	2	3
REVISION	A	B	A

REVISIONS				D	C	B
ZONE	LTR	DESCRIPTION	DATE	APPROVAL		
C4	A	CHANGED TANG	[illegible]	[illegible]	[illegible]	[illegible]

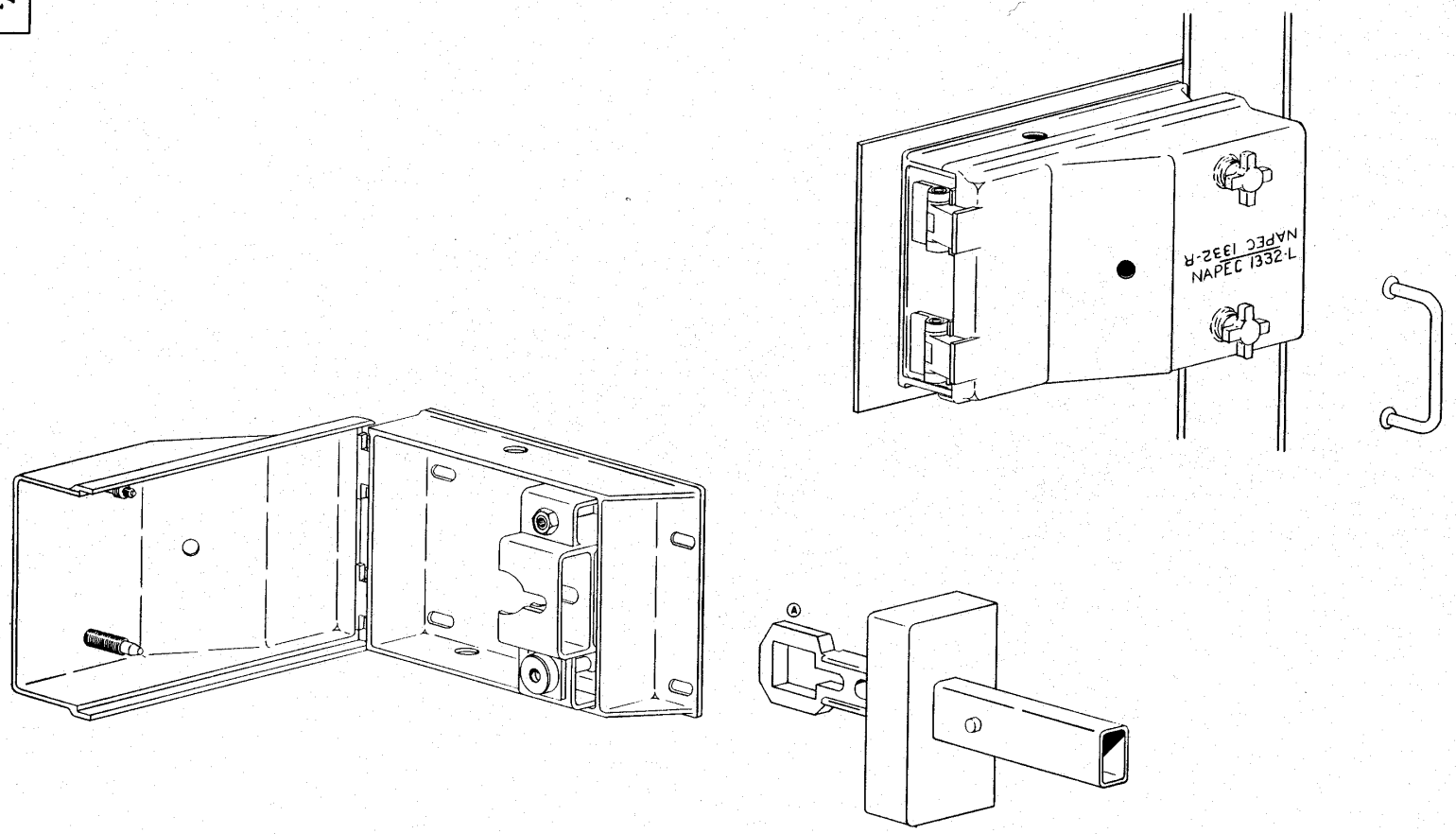

FIND NO.	QTY REQ	CODE IDENT	PART, DRAWING OR SPEC NO.	NOMENCLATURE/DESCRIPTION	REMARKS

PARTS LIST

NEXT ASSY	USED ON			
APPLICATION				

SYMBOLS: ITEM; WELD ITEM; ITEM CALLOUT; WELD ITEM CALLOUT

DO NOT SCALE DRAWING
UNLESS OTHERWISE SPECIFIED DIMENSIONS ARE IN INCHES.
TOLERANCES:
XX DECIMALS ±
XXX DECIMALS ±
FRACTIONS ±
ANGLES ±

SCALE: NONE

	INITIALS	DATE
EXAMINED		
EXAMINED		
SAFETY		
ENGINEER		
CHECKED		
DESIGNED		

APPROVED: MAR 8 19 83

NAVAL AMMUNITION PRODUCTION ENGINEERING CENTER CRANE, IN 47522

DEPARTMENT OF THE NAVY NAVAL SEA SYSTEMS COMMAND WASHINGTON, DC 20362

UNIVERSAL SECURITY SYSTEM INSTALLATION PROCEDURE FOR SLIDING DOOR; LEFT-SIDE MOUNT

SIZE: F | CODE IDENT NO. 53711 | NAVSEA | DWG NO. 5532347

SHEET 1 OF 3

REVISIONS				
ZONE	LTR	DESCRIPTION	DATE	APPROVAL
C6	A	CHANGED TANG		
	B	SEE NOR 5532347 B		

NOTES
1. INTERPRET DRAWING IN ACCORDANCE WITH DOD STD 100
2. REMOVE BURRS AND SHARP EDGES

NAVSEA 5532347 SHEET 2 OF 3

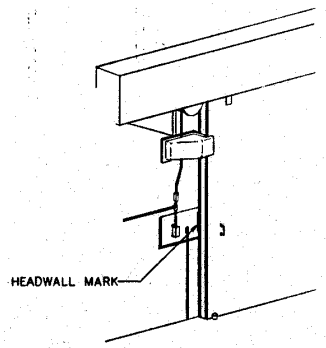

STEP 1
OPEN AND CLOSE MAGAZINE DOOR SEVERAL TIMES NOTING THE POSITION OF THE DOOR EACH TIME IT STOPS IN THE CLOSED POSITION. MARK THIS POSITION ON THE HEADWALL. REMOVE ANY OBSTRUCTIONS FROM THE MAGAZINE HEADWALL IN AREA APPROXIMATELY 2" LEFT OF THE DOOR (IN CLOSED POSITION) AND AT A HEIGHT 3" TO 5" ABOVE THE MAGAZINE OR APRON. (B)

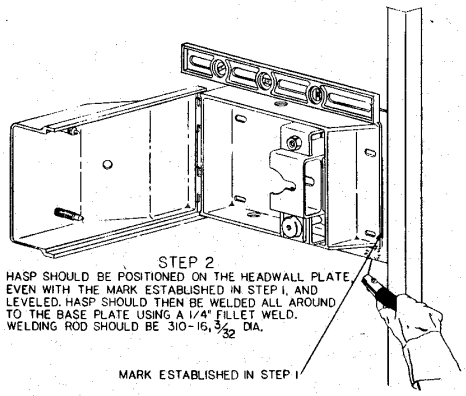

STEP 2
HASP SHOULD BE POSITIONED ON THE HEADWALL PLATE EVEN WITH THE MARK ESTABLISHED IN STEP 1, AND LEVELED. HASP SHOULD THEN BE WELDED ALL AROUND TO THE BASE PLATE USING A 1/4" FILLET WELD. WELDING ROD SHOULD BE 310-16, $\frac{3}{32}$ DIA. (B)

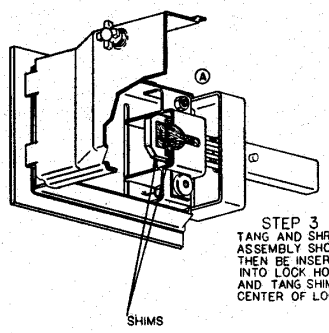

STEP 3
TANG AND SHROUD ASSEMBLY SHOULD THEN BE INSERTED INTO LOCK HOUSING AND TANG SHIMMED IN CENTER OF LOCK HOUSING.

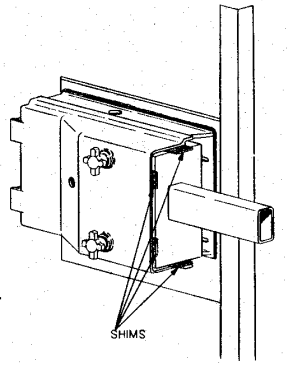

STEP 4
CLOSE COVER AND FASTEN SECURELY USING TWO JACKSCREWS.
INSERT WOODEN SHIM BETWEEN SHROUD AND COVER AS SHOWN TO CENTER SHROUD ASSEMBLY.

FIND NO.	QTY REQ	CODE IDENT.	PART, DRAWING OR SPEC NO.	NOMENCLATURE/DESCRIPTION	REMARKS

PARTS LIST

SYMBOLS: (1) ITEM; (2) WELD ITEM; ITEM CALLOUT; WELD ITEM CALLOUT

DO NOT SCALE DRAWING
UNLESS OTHERWISE SPECIFIED DIMENSIONS ARE IN INCHES
TOLERANCES:
XX DECIMALS ±
XXX DECIMALS ±
FRACTIONS ±
ANGLES ±
SCALE: NONE

	INITIALS	DATE
EXAMINED		
EXAMINED		
SAFETY		
ENGINEER		
CHECKED		
DESIGNED		
APPROVED		

NAVAL AMMUNITION PRODUCTION ENGINEERING CENTER CRANE, IN 47522
DEPARTMENT OF THE NAVY NAVAL SEA SYSTEMS COMMAND WASHINGTON, DC 20362

UNIVERSAL SECURITY SYSTEM INSTALLATION PROCEDURE FOR SLIDING DOOR; LEFT-SIDE MOUNT

NEXT ASSY | USED ON
APPLICATION

SIZE F | CODE IDENT NO. 53711 | NAVSEA DWG NO. 5532347 | SHEET 2 OF 3

REVISIONS				D	C	B
ZONE	LTR	DESCRIPTION	DATE	APPROVAL		
C6		CHANGED TANG				
C2	A	CHANGED TANG & LOCK	[illegible]	[illegible]	[illegible]	[illegible]

NOTES
1. INTERPRET DRAWING IN ACCORDANCE WITH DOD-STD-100.
2. REMOVE BURRS AND SHARP EDGES

NAVSEA DRAWING NO. 5532347
SHEET 3 OF 3

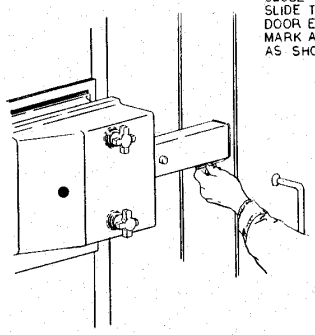

STEP 5
CLOSE DOOR UNTIL SLIDE TUBE TOUCHES DOOR END.
MARK AROUND TANG AS SHOWN.

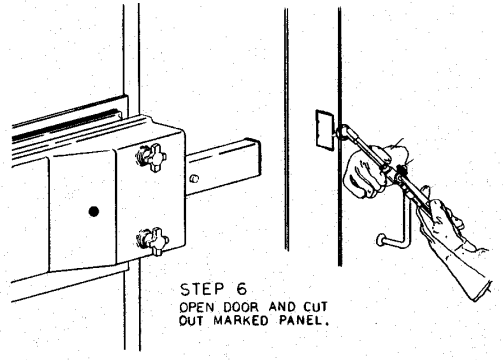

STEP 6
OPEN DOOR AND CUT OUT MARKED PANEL.

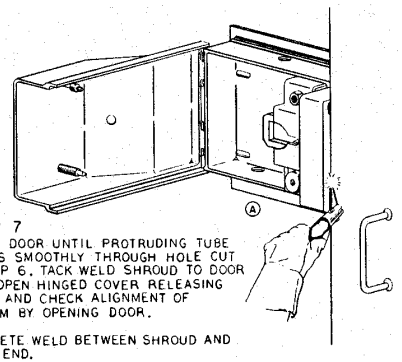

STEP 7
CLOSE DOOR UNTIL PROTRUDING TUBE PASSES SMOOTHLY THROUGH HOLE CUT IN STEP 6. TACK WELD SHROUD TO DOOR END. OPEN HINGED COVER RELEASING SHIMS AND CHECK ALIGNMENT OF SYSTEM BY OPENING DOOR.

COMPLETE WELD BETWEEN SHROUD AND DOOR END.

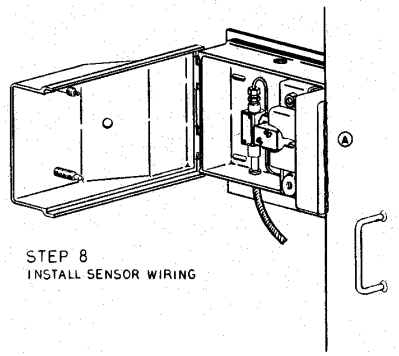

STEP 8
INSTALL SENSOR WIRING

FIND NO.	QTY REQ	CODE IDENT	PART, DRAWING OR SPEC NO.	NOMENCLATURE/DESCRIPTION	REMARKS

PARTS LIST

NEXT ASSY	USED ON
APPLICATION	

SYMBOLS: ITEM; WELD ITEM; ITEM CALLOUT; WELD ITEM CALLOUT

DO NOT SCALE DRAWING
UNLESS OTHERWISE SPECIFIED DIMENSIONS ARE IN INCHES.
TOLERANCES: XX DECIMALS ±; XXX DECIMALS ±; FRACTIONS ±; ANGLES ±
SCALE NONE

	INITIALS	DATE
EXAMINED		
EXAMINED		
SAFETY		
ENGINEER		
CHECKED		
DESIGNED		
APPROVED	[illegible]	19 [illegible]

NAVAL AMMUNITION PRODUCTION ENGINEERING CENTER CRANE, IN 47522

DEPARTMENT OF THE NAVY NAVAL SEA SYSTEMS COMMAND WASHINGTON, DC 20362

UNIVERSAL SECURITY SYSTEM INSTALLATION PROCEDURE FOR SLIDING DOOR; LEFT-SIDE MOUNT

SIZE	CODE IDENT NO.	NAVSEA	DWG NO.
F	53711		5532347

SHEET 3 OF 3

NOTICE: THE CONTENTS AND DESIGN DETAIL OF THE DRAWING WERE DEVELOPED BY THE NAVAL AMMUNITION PRODUCTION ENGINEERING CENTER AND ARE UNITED STATES GOVERNMENT PROPERTY

NAPEC DRAWING NO. 1369 SHEET 1 OF 1

NOTES
1. INTERPRET DRAWING IN ACCORDANCE WITH DOD-STD-100.
2. REMOVE BURRS AND SHARP EDGES

(1) OF NAPEC DWG NO: 1369
NAME: ANTI-ROTATION BLOCK
MATL: INVESTMENT CASTING STAINLESS STEEL 304L (CF-3)
SURF REQT: NAS-823/C-25
SPCL NOTE: ALL RADII 1/32 EXCEPT AS NOTED
SCALE: 1/1

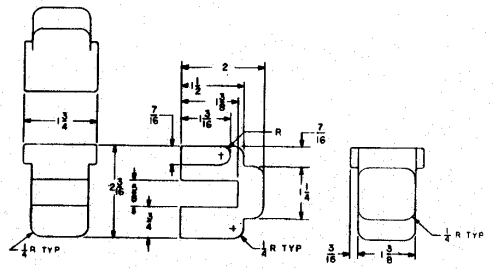

(2) OF NAPEC DWG NO: 1369
NAME: INSTALLATION JIG
MATL: POLYETHELENE 1.7 TO 2 LB/FT³ DENSITY
SPCL NOTE: HOT WIRE CUT PERMISSIBLE, ALL TOLERANCES +1/32, -0.
SCALE: 1/1

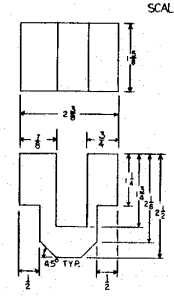

NOTE: ONE SET CONSISTS OF 2 EACH PARTS 1369-1 AND 1369-2

FIND NO.	QTY REQ	CODE IDENT	PART, DRAWING OR SPEC NO.	NOMENCLATURE/DESCRIPTION	REMARKS

PARTS LIST

NEXT ASSY	USED ON
	5532335
	5532334
	0958
	0957

APPLICATION

SYMBOLS: (1) ITEM; (1) WELD ITEM; (1) ITEM CALLOUT; (1) WELD ITEM CALLOUT

DO NOT SCALE DRAWING
UNLESS OTHERWISE SPECIFIED DIMENSIONS ARE IN INCHES
TOLERANCES
XX DECIMALS ±
XXX DECIMALS ±
FRACTIONS ± 1/64
ANGLES ±
SCALE 1/1

	INITIALS	DATE
EXAMINED		
EXAMINED		
SAFETY		
ENGINEER	[illegible]	4/8/81
CHECKED		
DESIGNED DRAWN		

APPROVED 4 / 8 19 81 [signature]

NAVAL AMMUNITION PRODUCTION ENGINEERING CENTER CRANE, IN 47522

DEPARTMENT OF THE NAVY NAVAL SEA SYSTEMS COMMAND WASHINGTON, DC 20362

ANTI-ROTATION BLOCK
FOR HIGH SECURITY HASP

SIZE F | CODE IDENT NO. 53711 | NAVAMPROENGCEN DWG NO. 5532350

SHEET 1 OF 1

REVISIONS

ZONE	LTR	DESCRIPTION	DATE	APPROVAL