NOTICE! THE CONTENTS AND DESIGN DETAIL OF THIS DRAWING WERE DEVELOPED BY THE NAVAL AMMUNITION PRODUCTION ENGINEERING CENTER AND ARE UNITED STATES GOVERNMENT PROPERTY

NAPEC DRAWING NO. 1403 SHEET 1 OF 1

NOTES
1. INTERPRET DRAWING IN ACCORDANCE WITH MIL-STD-100.
2. REMOVE BURRS AND SHARP EDGES

INSTALLATION INSTRUCTIONS

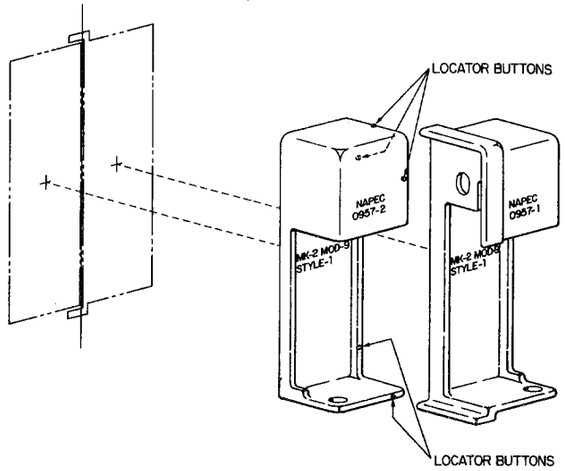

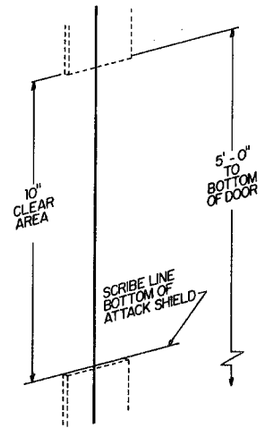

STEP 1

CUT AWAY 10 INCHES OF ASTRAGAL FROM MAGAZINE DOOR IF ASTRAGAL IS PRESENT.

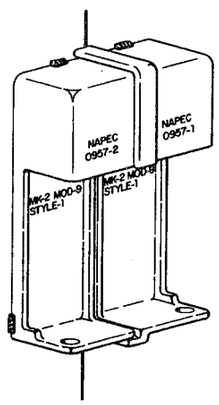

STEP 2

NOTE: LOCATOR BUTTONS HAVE BEEN CAST ONTO THE HASP TO AID INSTALLATION. POSITION HASP ON DOORS USING THE BUTTONS TO ESTABLISH CLEARANCE. TACK WELD HASP ONTO DOORS.

* NOTE: USE WELDING ELECTRODE 310-15 OR 310-16.

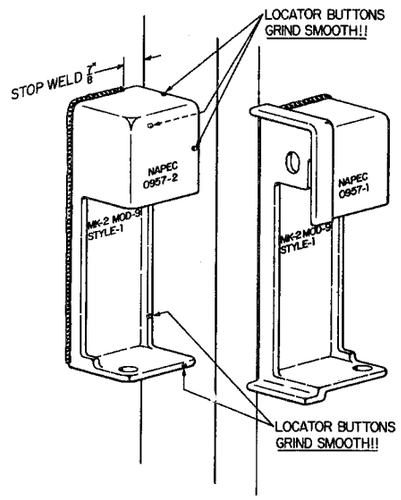

STEP 3

OPEN DOOR AND FINISH WELDING,*

CAUTION

DO NOT WELD ON DOOR EDGES.
GRIND OFF LOCATOR BUTTONS!!
CLOSE DOORS.

APPLICATIONS

RIGHT HAND DOOR OPENING FIRST WITHOUT ASTRACAL

RIGHT HAND DOOR OPENING FIRST WITH ASTRACAL

SINGLE DOOR HINGED RIGHT SWINGING OUT

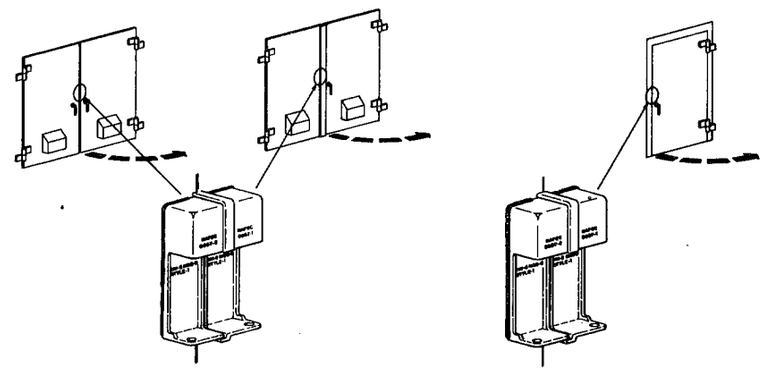

DOUBLE SLIDING DOORS ON INSIDE OR OUTSIDE OF JAMB

SLIDING DOORS MOVING RIGHT TO OPEN WITH DOOR ON OUTSIDE OF JAMB

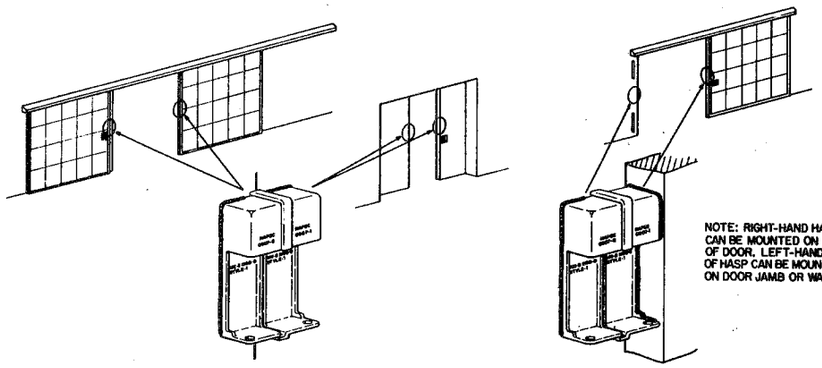

NOTE: RIGHT-HAND HALF CAN BE MOUNTED ON END OF DOOR. LEFT-HAND HALF OF HASP CAN BE MOUNTED ON DOOR JAMB OR WALL.

SINGLE DOOR HINGED LEFT OPENING IN

SLIDING DOOR MOVING RIGHT TO OPEN WITH DOOR ON INSIDE OF JAMB

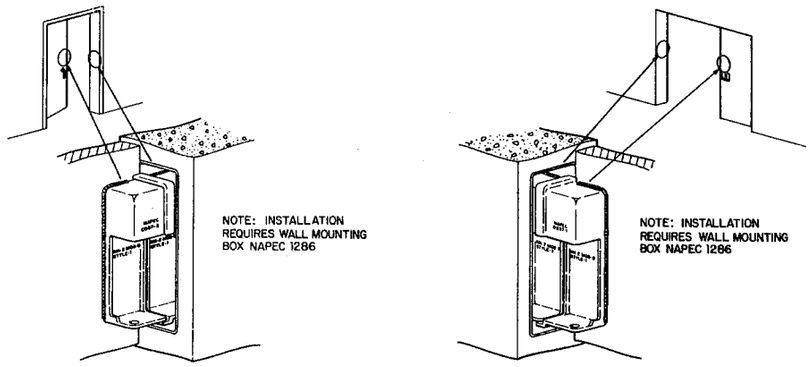

NOTE: INSTALLATION REQUIRES WALL MOUNTING BOX NAPEC 1286

NOTE: INSTALLATION REQUIRES WALL MOUNTING BOX NAPEC 1286

ZONE	LTR	REVISIONS DESCRIPTION	DATE	D	C	S APPROVAL

FIND NO.	QTY REQ	CODE IDENT	PART, DRAWING OR SPEC NO.	NOMENCLATURE/DESCRIPTION	REMARKS

PARTS LIST

NEXT ASSY	USED ON
APPLICATION	

SYMBOLS: ITEM; WELD ITEM; ITEM NO. ITEM CALLOUT; SHEET NO. WELD ITEM CALLOUT

DO NOT SCALE DRAWING
UNLESS OTHERWISE SPECIFIED, DIMENSIONS ARE IN INCHES.
TOLERANCES:
XX DECIMALS ±
XXX DECIMALS ±
FRACTIONS ±
ANGLES ±
SCALE:

	INITIALS	DATE
EXAMINED		
EXAMINED		
SAFETY		
ENGINEER		
CHECKED		
DESIGNED DRAWN		
APPROVED 2 July 19 82		

NAVAL AMMUNITION PRODUCTION ENGINEERING CENTER CRANE, IN 47522

DEPARTMENT OF THE NAVY NAVAL SEA SYSTEMS COMMAND WASHINGTON, DC 20362

HIGH SECURITY HASP APPLICATION AND INSTALLATION INSTRUCTIONS FOR MK 2 MOD 9 STYLE 1

SIZE F | CODE IDENT NO. 53711 | NAVAMPROENGCEN DWG NO. 1403

SHEET 1 OF 1

SUPPLIED BY:
SHELLCAST, INC.
~~P.O. BOX 128~~ 5230 Industrial Park Dr.
~~WHITEHALL, MI 49461~~ Montague, MI 49437
~~(616)~~ 893-8245 & 893-2195
231

Conforms To MIL-H-29181 (YD)

NOTICE: THE CONTENTS AND DESIGN DETAIL OF THIS DRAWING WERE DEVELOPED BY THE NAVAL AMMUNITION PRODUCTION ENGINEERING CENTER AND ARE UNITED STATES GOVERNMENT PROPERTY.

NAPEC DRAWING NO. 1404 SHEET 1 OF 1

NOTES

1. INTERPRET DRAWING IN ACCORDANCE WITH MIL-STD-100.
2. REMOVE BURRS AND SHARP EDGES

INSTALLATION INSTRUCTIONS

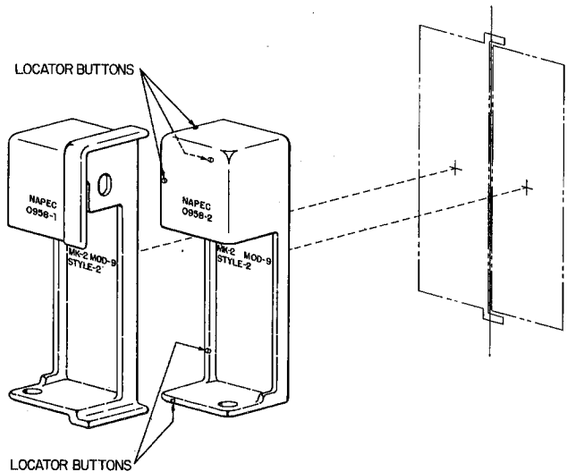

STEP 1

CUT AWAY 10 INCHES OF ASTRAGAL FROM MAGAZINE DOOR IF ASTRAGAL IS PRESENT.

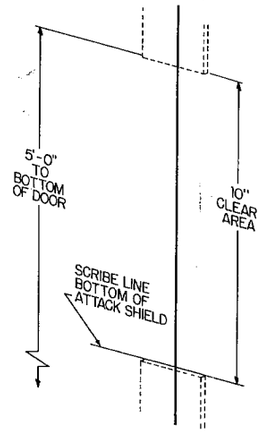

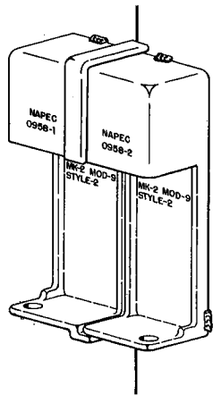

STEP 2

NOTE: LOCATOR BUTTONS HAVE BEEN CAST ONTO THE HASP TO AID INSTALLATION. POSITION HASP ON DOORS USING THE BUTTONS TO ESTABLISH CLEARANCE. TACK WELD HASP ONTO DOORS.

NOTE: USE WELDING ELECTRODE 310-15 OR 310-16.

STEP 3

OPEN DOOR AND FINISH WELDING.*

CAUTION

DO NOT WELD ON DOOR EDGES.
GRIND OFF LOCATOR BUTTONS!!
CLOSE DOORS.

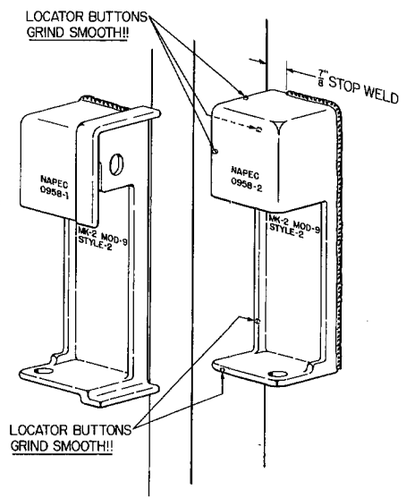

APPLICATIONS

LEFT HAND DOOR OPENING FIRST WITH ASTRACAL

LEFT HAND DOOR OPENING FIRST WITHOUT ASTRACAL

SINGLE DOOR HINGED LEFT SWINGING OUT

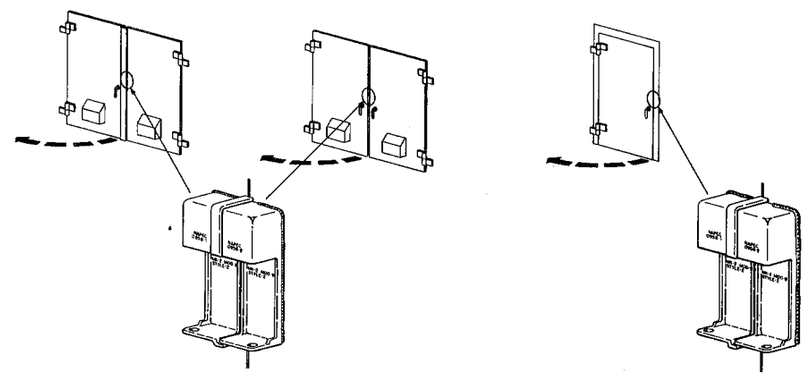

DOUBLE SLIDING DOORS ON INSIDE OR OUTSIDE OF JAMB

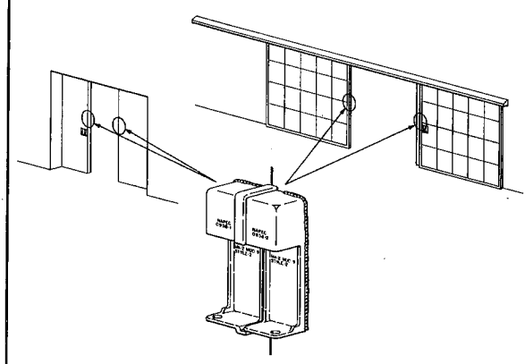

SLIDING DOORS MOVING LEFT TO OPEN WITH DOOR ON OUTSIDE OF JAMB

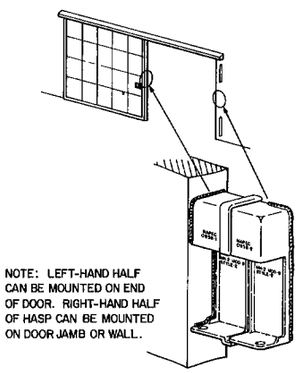

NOTE: LEFT-HAND HALF CAN BE MOUNTED ON END OF DOOR. RIGHT-HAND HALF OF HASP CAN BE MOUNTED ON DOOR JAMB OR WALL.

SINGLE DOOR HINGED RIGHT OPENING IN

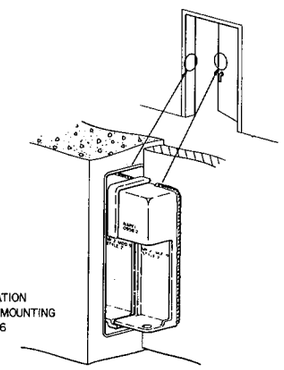

NOTE: INSTALLATION REQUIRES WALL MOUNTING BOX NAPEC 1286

SLIDING DOOR MOVING LEFT TO OPEN WITH DOOR ON INSIDE OF JAMB

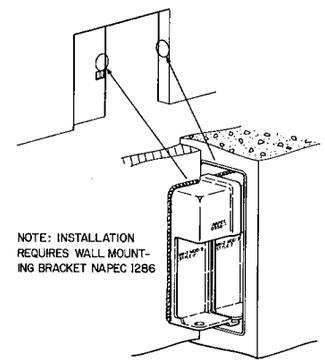

NOTE: INSTALLATION REQUIRES WALL MOUNTING BRACKET NAPEC 1286

REVISIONS					
ZONE	LTR	DESCRIPTION	DATE	APPROVAL	

FIND NO.	QTY REQ	CODE IDENT	PART, DRAWING OR SPEC NO.	NOMENCLATURE/DESCRIPTION	REMARKS

PARTS LIST

NEXT ASSY	USED ON
APPLICATION	

SYMBOLS: ITEM; WELD ITEM; ITEM NO. / ITEM CALLOUT; SHEET NO. / WELD ITEM CALLOUT

DO NOT SCALE DRAWING

UNLESS OTHERWISE SPECIFIED, DIMENSIONS ARE IN INCHES.

TOLERANCES:
XX DECIMALS ±
XXX DECIMALS ±
FRACTIONS ±
ANGLES ±

SCALE:

	INITIALS	DATE
EXAMINED		
EXAMINED		
SAFETY		
ENGINEER		
CHECKED		
DESIGNED DRAWN		

APPROVED 2 Aug 1982

NAVAL AMMUNITION PRODUCTION ENGINEERING CENTER CRANE, IN 47522

DEPARTMENT OF THE NAVY NAVAL SEA SYSTEMS COMMAND WASHINGTON, DC 20362

HIGH SECURITY HASP APPLICATION AND INSTALLATION INSTRUCTIONS FOR MK 2 MOD 9 STYLE 2

SIZE F | CODE IDENT NO. 53711 | NAVAMPROENGCEN DWG NO. 1404

SHEET 1 OF 1